Module Door Station

User Manual

Legal Information

©2020 Hangzhou Hikvision Digital Technology Co., Ltd. All rights reserved.

About this Manual

The Manual includes instructions for using and managing the Product. Pictures, charts, images and all other information hereinafter are for description and explanation only. The information contained in the Manual is subject to change, without notice, due to firmware updates or other reasons. Please find the latest version of this Manual at the Hikvision website (***https://www.hikvision.com/***).

Please use this Manual with the guidance and assistance of professionals trained in supporting the Product.

Trademarks

HIKVISION and other Hikvision's trademarks and logos are the properties of Hikvision in various jurisdictions.

Other trademarks and logos mentioned are the properties of their respective owners.

Disclaimer

TO THE MAXIMUM EXTENT PERMITTED BY APPLICABLE LAW, THIS MANUAL AND THE PRODUCT DESCRIBED, WITH ITS HARDWARE, SOFTWARE AND FIRMWARE, ARE PROVIDED “AS IS” AND “WITH ALL FAULTS AND ERRORS”. HIKVISION MAKES NO WARRANTIES, EXPRESS OR IMPLIED, INCLUDING WITHOUT LIMITATION, MERCHANTABILITY, SATISFACTORY QUALITY, OR FITNESS FOR A PARTICULAR PURPOSE. THE USE OF THE PRODUCT BY YOU IS AT YOUR OWN RISK. IN NO EVENT WILL HIKVISION BE LIABLE TO YOU FOR ANY SPECIAL, CONSEQUENTIAL, INCIDENTAL, OR INDIRECT DAMAGES, INCLUDING, AMONG OTHERS, DAMAGES FOR LOSS OF BUSINESS PROFITS, BUSINESS INTERRUPTION, OR LOSS OF DATA, CORRUPTION OF SYSTEMS, OR LOSS OF DOCUMENTATION, WHETHER BASED ON BREACH OF CONTRACT, TORT (INCLUDING NEGLIGENCE), PRODUCT LIABILITY, OR OTHERWISE, IN

CONNECTION WITH THE USE OF THE PRODUCT, EVEN IF HIKVISION HAS BEEN ADVISED OF THE POSSIBILITY OF SUCH DAMAGES OR LOSS.

YOU ACKNOWLEDGE THAT THE NATURE OF INTERNET PROVIDES FOR INHERENT SECURITY RISKS, AND HIKVISION SHALL NOT TAKE ANY RESPONSIBILITIES FOR ABNORMAL OPERATION, PRIVACY LEAKAGE OR OTHER DAMAGES RESULTING FROM CYBER-ATTACK, HACKER ATTACK, VIRUS INSPECTION, OR OTHER INTERNET SECURITY RISKS; HOWEVER, HIKVISION WILL PROVIDE TIMELY TECHNICAL SUPPORT IF REQUIRED.

YOU AGREE TO USE THIS PRODUCT IN COMPLIANCE WITH ALL APPLICABLE LAWS, AND YOU ARE SOLELY RESPONSIBLE FOR ENSURING THAT YOUR USE CONFORMS TO THE APPLICABLE LAW. ESPECIALLY, YOU ARE RESPONSIBLE, FOR USING THIS PRODUCT IN A MANNER THAT DOES NOT INFRINGE ON THE RIGHTS OF THIRD PARTIES, INCLUDING WITHOUT LIMITATION, RIGHTS OF PUBLICITY, INTELLECTUAL PROPERTY RIGHTS, OR DATA PROTECTION AND OTHER PRIVACY RIGHTS. YOU SHALL NOT USE THIS PRODUCT FOR ANY PROHIBITED END-USES, INCLUDING THE DEVELOPMENT OR PRODUCTION OF WEAPONS OF MASS DESTRUCTION, THE DEVELOPMENT OR PRODUCTION OF CHEMICAL OR BIOLOGICAL WEAPONS, ANY ACTIVITIES IN THE CONTEXT RELATED TO ANY NUCLEAR EXPLOSIVE OR UNSAFE NUCLEAR FUEL-CYCLE, OR IN SUPPORT OF HUMAN RIGHTS ABUSES.

IN THE EVENT OF ANY CONFLICTS BETWEEN THIS MANUAL AND THE APPLICABLE LAW, THE LATER PREVAILS.

Data Protection

During the use of device, personal data will be collected, stored and processed. To protect data, the development of Hikvision devices incorporates privacy by design principles. For example, for device with facial recognition features, biometrics data is stored in your device with encryption method; for fingerprint device, only fingerprint template will be saved, which is impossible to reconstruct a fingerprint image.

As data controller, you are advised to collect, store, process and transfer data in accordance with the applicable data protection laws and regulations, including without limitation, conducting security controls to safeguard personal data, such as, implementing reasonable administrative and physical security controls, conduct periodic reviews and assessments of the effectiveness of your security controls.

Symbol Conventions

The symbols that may be found in this document are defined as follows.

Symbol	Description
Danger	Indicates a hazardous situation which, if not avoided, will or could result in death or serious injury.
Caution	Indicates a potentially hazardous situation which, if not avoided, could result in equipment damage, data loss, performance degradation, or unexpected results.
Note	Provides additional information to emphasize or supplement important points of the main text.

Regulatory Information

FCC Information

Please take attention that changes or modification not expressly approved by the party responsible for compliance could void the user's authority to operate the equipment.

FCC compliance: This equipment has been tested and found to comply with the limits for a Class B digital device, pursuant to part 15 of the FCC Rules. These limits are designed to provide reasonable protection against harmful interference in a residential installation. This equipment generates, uses and can radiate radio frequency energy and, if not installed and used in accordance with the instructions, may cause harmful interference to radio communications. However, there is no guarantee that interference will not occur in a particular installation. If this equipment does cause harmful interference to radio or television reception, which can be determined by turning the equipment off and on, the user is encouraged to try to correct the interference by one or more of the following measures:

—Reorient or relocate the receiving antenna.

—Increase the separation between the equipment and receiver.

—Connect the equipment into an outlet on a circuit different from that to which the receiver is connected.

—Consult the dealer or an experienced radio/TV technician for help

FCC Conditions

This device complies with part 15 of the FCC Rules. Operation is subject to the following two conditions:

1. This device may not cause harmful interference.

2. This device must accept any interference received, including interference that may cause undesired operation.

EU Conformity Statement

This product and - if applicable - the supplied accessories too are marked with "CE" and comply therefore with the applicable harmonized European standards listed under the EMC Directive 2014/30/EU, the RoHS Directive 2011/65/EU

2012/19/EU (WEEE directive): Products marked with this symbol cannot be disposed of as unsorted municipal waste in the European Union. For proper recycling, return this product to your local supplier upon the purchase of equivalent new equipment, or dispose of it at designated collection points. For more information see: www.recyclethis.info

2006/66/EC (battery directive): This product contains a battery that cannot be disposed of as unsorted municipal waste in the European Union. See the product documentation for specific battery information. The battery is marked with this symbol, which may include lettering to indicate cadmium (Cd), lead (Pb), or mercury (Hg). For proper recycling, return the battery to your supplier or to a designated collection point. For more information see:www.recyclethis.info

Industry Canada ICES-003 Compliance

This device meets the CAN ICES-3 (B)/NMB-3(B) standards requirements.

This device complies with Industry Canada licence-exempt RSS standard(s). Operation is subject to the following two conditions:

1. this device may not cause interference, and
2. this device must accept any interference, including interference that may cause undesired operation of the device.

Le présent appareil est conforme aux CNR d'Industrie Canada applicables aux appareils radioexempts de licence. L'exploitation est autorisée aux deux conditions suivantes :

1. l'appareil ne doit pas produire de brouillage, et
2. l'utilisateur de l'appareil doit accepter tout brouillage radioélectrique subi, même si le brouillage est susceptible d'en compromettre le fonctionnement.

Under Industry Canada regulations, this radio transmitter may only operate using an antenna of a type and maximum (or lesser) gain approved for the transmitter by Industry Canada. To reduce potential radio interference to other users, the antenna type and its gain should be so chosen that the equivalent isotropically radiated power (e.i.r.p.) is not more than that necessary for successful communication.

Conformément à la réglementation d'Industrie Canada, le présent émetteur radio peut fonctionner avec une antenne d'un type et d'un gain maximal (ou inférieur) approuvé pour l'émetteur par Industrie Canada. Dans le but de réduire les risques de brouillage radioélectrique à l'intention des autres utilisateurs, il faut choisir le type d'antenne et son gain de sorte que la puissance isotrope rayonnée équivalente (p.i.r.e.) ne dépasse pas l'intensité nécessaire à l'établissement d'une communication satisfaisante.

This equipment should be installed and operated with a minimum distance 20cm between the radiator and your body.

Cet équipement doit être installé et utilisé à une distance minimale de 20 cm entre le radiateur et votre corps.

Contents

1 Appearance 1
2 Terminal and Wiring 9
2.1 Terminal Description 9
2.2 Module Door Station Wiring 13
2.2.1 Door Lock Wiring 13
2.2.2 Door Contact Wiring 14
2.2.3 Exit Button Wiring 14
3 Installation 16
3.1 Configure Sub Module Address 16
3.2 One-Module Installation 17
3.2.1 One-Module Surface Mounting 17
3.2.2 One-Module Flush Mounting 20
3.3 Two-Module Installation 25
3.3.1 Two-Module Surface Mounting 25
3.3.2 Two-Module Flush Mounting 29
3.4 Three-Module Installation 33
3.4.1 Three-Module Surface Installation 33
3.4.2 Three-Module Flush Mounting 37
3.5 More-Than-Three Module Installation 41
3.5.1 More-than-Three Module Surface Mounting 41
3.5.2 More-Than-Three Module Flush Mounting 47
4 Activation 55

4.1 Activate Device via Client Software 55
4.2 Edit Network Parameters 55
5 Configuration via Client Software 57
5.1 Device Management 57
5.1.1 Add Online Device 57
5.1.2 Add Device by IP Address 58
5.1.3 Add Device by IP Segment 58
5.2 Live View via Door Station 59
5.3 Remote Configuration 59
5.3.1 Device Management 59
5.3.2 Local Parameters Settings 61
5.3.3 System Settings 62
5.3.4 Network Settings 65
5.3.5 Video & Audio Settings 70
5.3.6 Image Settings 72
5.3.7 Event Settings 75
5.3.8 Schedule Settings 78
5.3.9 Intercom Settings 79
5.3.10 Access Control Settings 83
5.3.11 Theme Settings 85
5.4 Video Intercom Settings 86
5.4.1 Receive Call from Door Station 86
5.4.2 Search Call Logs 87
5.4.3 Upload Armed Information 88

A. Communication Matrix and Device Command 89

1 Appearance

Main Unit

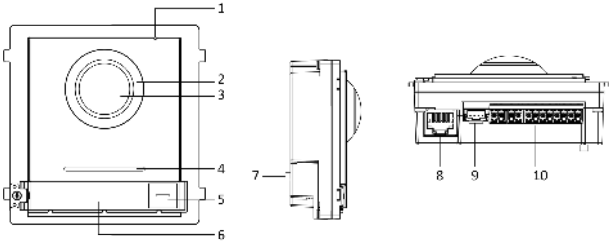

Figure 1-1 Main Unit Appearance

Table 1-1 Appearance Description

No.	Description
1	Microphone
2	Low Illumination IR Supplement Light
3	Built-in Camera
4	Loudspeaker
5	Call Button
6	Nametag
7	TAMPER
8	Network Interface
9	Module-Connecting Interface (output)
10	Terminals

Note

- Nametag area supports insert customized name card. The suggested card size is: 58 (L) x 11.7(W) mm.
- The module connecting interface is used to connect other function module, such as nametag module, keypad module, card reader module, etc. All these modules are known as sub module.

Two-Wire Main Unit

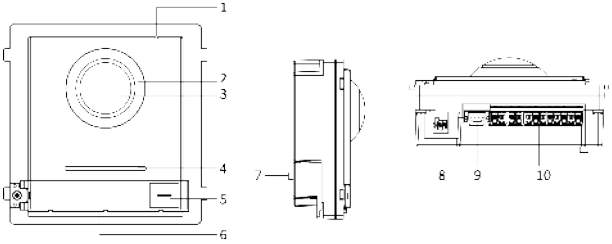

Figure 1-2 Two-Wire Main Unit

Table 1-2 Appearance Description

No.	Description
1	Microphone
2	Low Illumination IR Supplement Light
3	Built-in Camera
4	Loudspeaker
5	Call Button
6	Nametag
7	TAMPER
8	Two-Wire Interface

No.	Description
9	Module-Connecting Interface (output)
10	Terminals

Note

- Nametag area supports insert customized name card. The suggested card size is: 58 (L) x 11.7(W) mm.
- The module connecting interface is used to connect other function module, such as nametag module, keypad module, card reader module, etc. All these modules are known as sub module.

Nametag Module

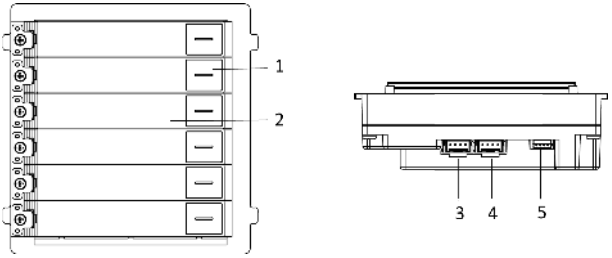

Figure 1-3 Nametag Module Appearance

Table 1-3 Appearance Description

No.	Description
1	Call Button
2	Nametag
3	Module-Connecting Interface (output)
4	Module-Connecting Interface (input)
5	Debugging Port

Keypad Module

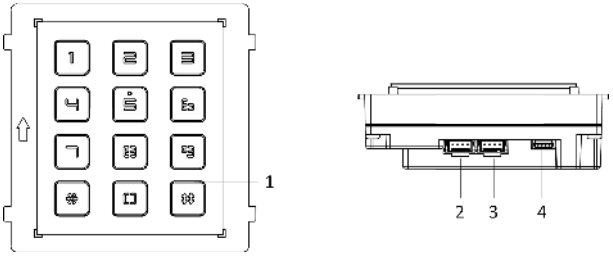

Figure 1-4 Keypad Module Appearance

Table 1-4 Appearance Description

No.	Description
1	Button
2	Module-Connecting Interface (output)
3	Module-Connecting Interface (input)
4	Debugging Port

Indicator Module

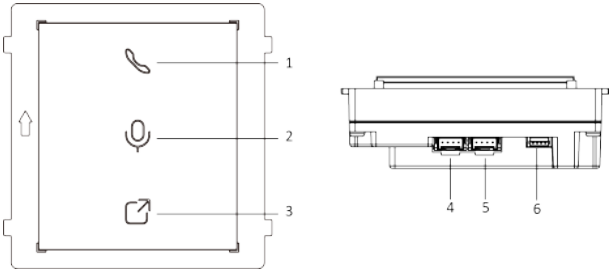

Figure 1-5 Indicator Module

Table 1-5 Appearance Description

No.	Description
1	Calling Indicator
2	Two-way Audio Indicator
3	Unlock Indicator
4	Module-connecting Interface (output)
5	Module-connecting Interface(input)
6	Debugging Port

Card Reader Module

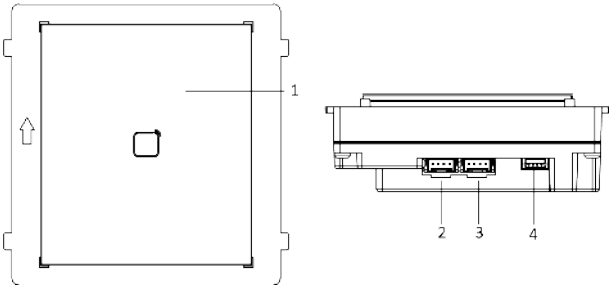

Figure 1-6 Card Reader Module

Table 1-6 Appearance Description

No.	Description
1	Card Reading Area
2	Module-connecting Interface (output)
3	Module-connecting Interface(input)
4	Debugging Port

Display Module

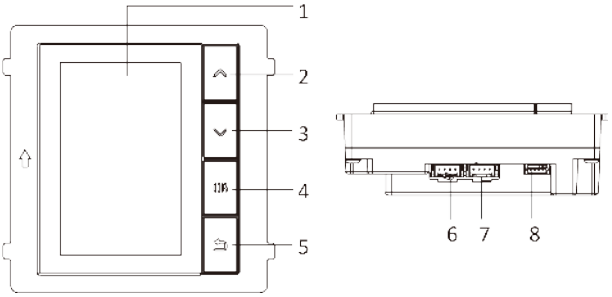

Figure 1-7 Display Module

Table 1-7 Description

No.	Description	No.	Description
1	Screen	5	Back Button
2	Up Button	6	Module-connecting Interface (output)
3	Down Button	7	Module-connecting Interface (input)
4	Confirm Button	8	Debug Port

Information Module

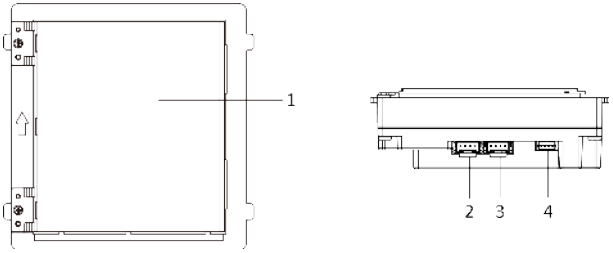

Figure 1-8 Information Module

Table 1-8 Description

No.	Description
1	Display Area
2	Module-connecting Interface (output)
3	Module-connecting Interface (input)
4	Debugging Port

Touch-Display Module

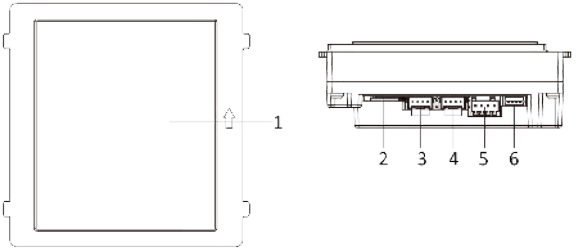

Figure 1-9 Touch-Display Module

Table 1-9 Description

No.	Description
1	Touch-Display Area
2	TF Card Slot
3	Module-connecting Interface (output)
4	Module-connecting Interface (input)
5	Video & Audio Terminal
6	Debugging Port

Note

The debugging port is used for debugging only.

2 Terminal and Wiring

2.1 Terminal Description

Main Unit Terminals

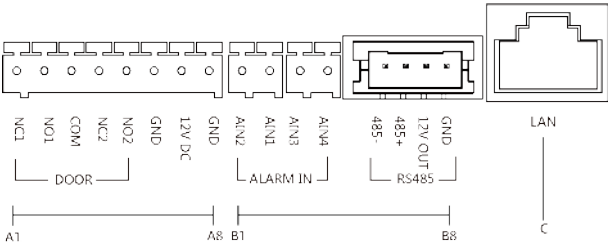

Figure 2-1 Main Unit Terminals

Table 2-1 Descriptions of Terminals and Interfaces

No.	Interface	Description
A1	NC1	Door Lock Relay Output (NC)
A2	NO1	Door Lock Relay Output (NO)
A3	COM	Common Interface
A4	NC2	Door Lock Relay Output (NC)
A5	NO2	Door Lock Relay Output (NO)
A6	GND	Grounding
A7	12 VDC	Power Input
A8	GND	Grounding
B1	AIN2	For the access of Door Magnetic 2
B2	AIN1	For the access of Door Magnetic 1

No.	Interface	Description
B3	AIN3	For the access of Exit Button 1
B4	AIN4	For the access of Exit Button 2
B5	485-	Module-connecting Interface
B6	485+	
B7	12 V OUT	
B8	GND	
C	LAN	PoE Network Interface(Supports IEEE 802.3af/at-Compliant Devices)

Two-Wire Main Unit Terminal

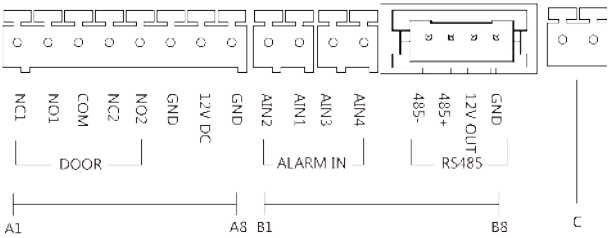

Figure 2-2 Two-Wire Main Unit Terminal

Table 2-2 Descriptions of Terminals and Interfaces

No.	Interface	Description
A1	NC1	Door Lock Relay Output (NC)
A2	NO1	Door Lock Relay Output (NO)
A3	COM	Common Interface
A4	NC2	Door Lock Relay Output (NC)

No.	Interface	Description
A5	NO2	Door Lock Relay Output (NO)
A6	GND	Grounding
A7	12 VDC	Reserved
A8	GND	Grounding
B1	AIN2	For the access of Door Magnetic 2
B2	AIN1	For the access of Door Magnetic 1
B3	AIN3	For the access of Exit Button 1
B4	AIN4	For the access of Exit Button 2
B5	485-	Module-connecting Interface
B6	485+	
B7	12 V OUT	
B8	GND	
C	Two-Wire Interface	Two-Wire Interface

Sub Module Terminal (Except Touch-Display Module)

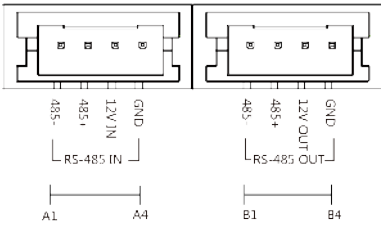

Figure 2-3 Sub Module Terminal (Except Touch-Display Module)

Table 2-3 Description

No.	Interface	Description
A1	485-	Module-Connecting Interface (Input)
A2	485+	
A3	12V IN	
A4	GND	
B1	485-	Module-Connecting Interface (Output)
B2	485+	
B3	12V OUT	
B4	GND	

Touch-Display Module

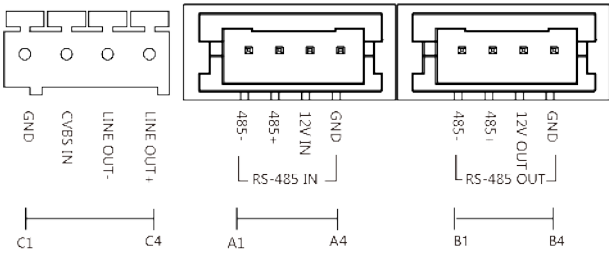

Figure 2-4 Touch-Display Module

Table 2-4 Description

No.	Interface	Description
A1	485-	Module-Connecting Interface (Input)
A2	485+	
A3	12V IN	

No.	Interface	Description
A4	GND	
B1	485-	Module-Connecting Interface (Output)
B2	485+	
B3	12V OUT	
B4	GND	
C1	GND	Grounding Interface
C2	CVSB IN	Composite Video Broadcast Signal Input (Reserved)
C3	LINEOUT-	Audio Output (Reserved)
C4	LINEOUT+	

2.2 Module Door Station Wiring

2.2.1 Door Lock Wiring

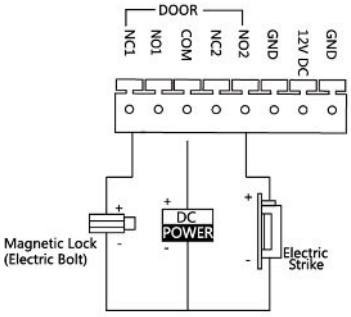

Figure 2-5 Door Lock Wiring

Note

Terminal NC1/COM is set as default for accessing magnetic lock/electric bolt; terminal NO2/COM is set as default for accessing electric strike.

2.2.2 Door Contact Wiring

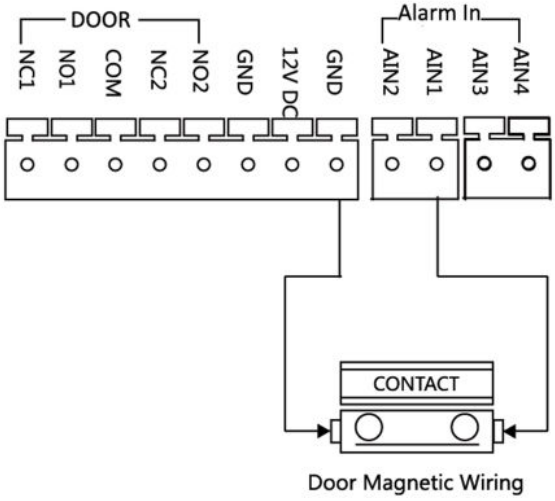

Figure 2-6 Door Contact Wiring

Note

AIN1 and AIN2 are defaulted to connect door contact. Door contact connected to AIN1 detects status of the lock that connected to NC1/NO1; Door contact connected to AIN2 detects the status of the lock connected to NC2/NO2.

2.2.3 Exit Button Wiring

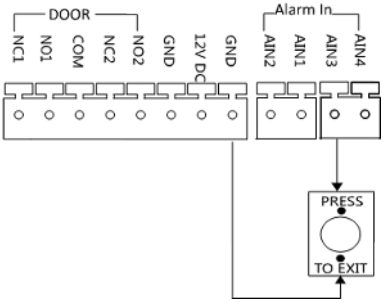

Figure 2-7 Exit Button Wiring

Note

AIN3 and AIN4 are set as default for connecting exit button. Exit button connected to AIN3 opens the lock connected to NC1/NO1; Exit button connected to AIN4 controls the lock that connected to NC2/NO2.

3 Installation

Note

- Make sure the device in the package is in good condition and all the assembly parts are included.
- Sub module must work along with the main unit.
- Set the sub module address before start the installation steps.
- Make sure the place for surface mounting is flat.
- Make sure all the related equipment is power-off during the installation.
- Tools that you need to prepare for installation:
  Drill (ø6), cross screwdriver (PH1*150 mm), and gradienter.

3.1 Configure Sub Module Address

You need to set the sub module address via DIP switch before installation.

Steps

1. Remove the rubber cover on the rear panel of the sub module to expose the DIP switch.

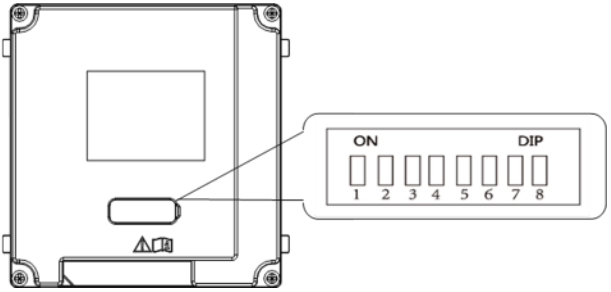

Figure 3-1 DIP Switch

2. Set the sub module address according to the DIP rules, and install the rubber cover back.

Note

- Bit 1, 2, 3, 4 are used to coding the sub module address. Bit 5, 6, 7 are reserved. Set Bit 8 as on to enable a resistance (120Ω).
- Valid sub module address is from 1 to 8. The address should be unique for connecting to the main unit.
  The sub module address and its corresponding switch status are displayed as below.

Table 3-1 Description

Sub Module Address	1	2	3	4	5	6	7	8
Bit 1	ON	OFF	ON	OFF	ON	OFF	ON	OFF
Bit 2	OFF	ON	ON	OFF	OFF	ON	ON	OFF
Bit 3	OFF	OFF	OFF	ON	ON	ON	ON	OFF
Bit 4	OFF	OFF	OFF	OFF	OFF	OFF	OFF	ON

3.2 One-Module Installation

3.2.1 One-Module Surface Mounting

Before You Start

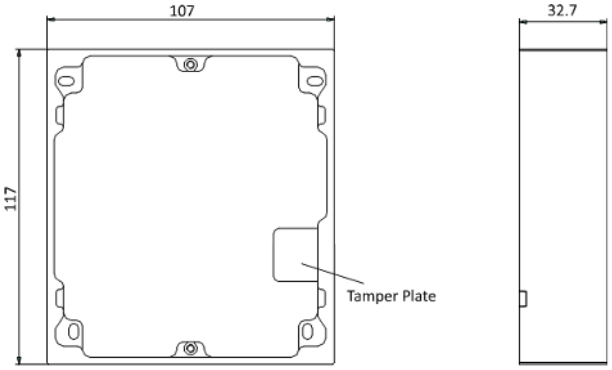

Figure 3-2 Mounting Frame

Note

- The dimension of one module mounting frame (W × H × D) is: 117 mm × 107 mm × 32.7 mm.
- The dimensions above are for reference only. The actual size can be slightly different from the theoretical dimension.

Steps

1. Paste the installation Sticker 1 onto the wall. Make sure the sticker is placed horizontally via measuring with the gradienter.
2. Drill 4 holes according to the screw holes on the sticker.

Note

- The suggested size of hole is 6 (diameter) × 25 (depth) mm.
- The suggested length of cables left outside is 100 mm.

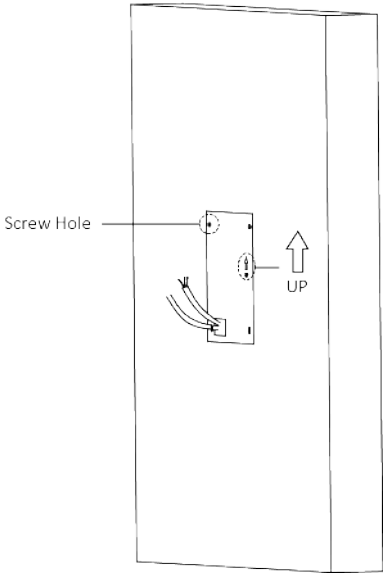

Figure 3-3 Drill Screw Holes

3. Remove the stricker and insert the expansion sleeves into the screw holes.

4. Fix the mounting frame onto the wall with 4 expansion bolts.

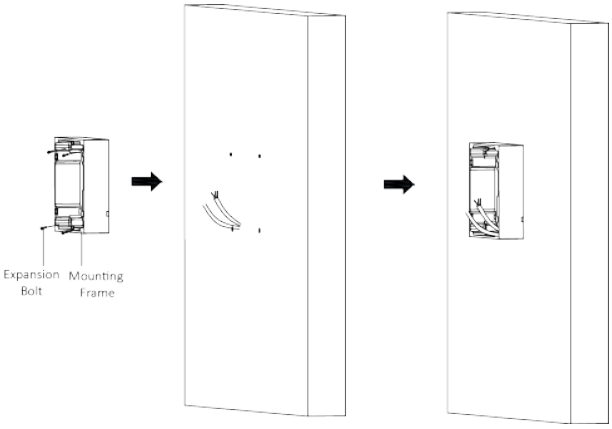

Figure 3-4 Fix the Mounting Frame

5. Connect the cables to the corresponding interfaces of the main unit and insert the main unit into the frame.

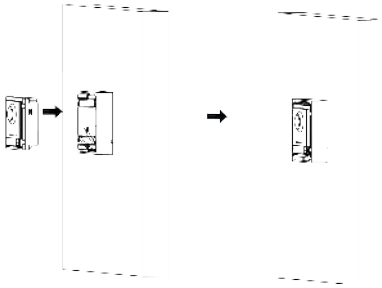

Figure 3-5 Insert the Main Unit

6. Fix the cover onto the frame.

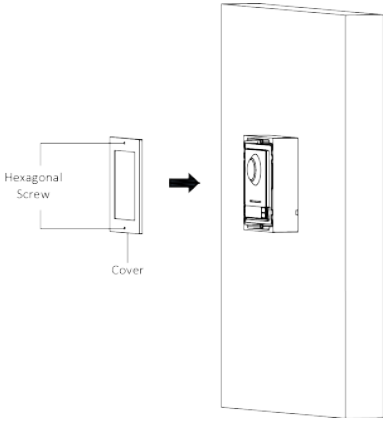

Figure 3-6 Fix the Cover

3.2.2 One-Module Flush Mounting

Before You Start

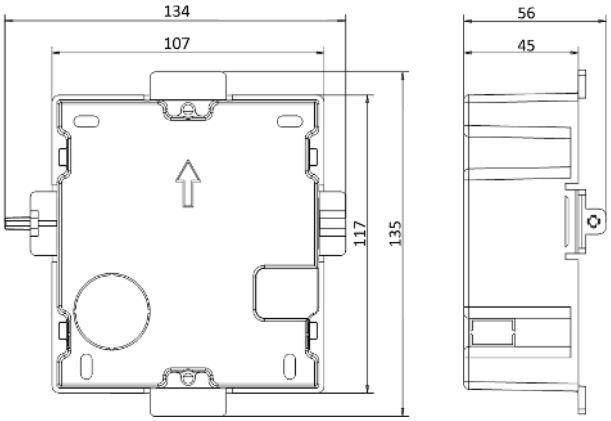

Figure 3-7 Front and Side View of the Gang Box

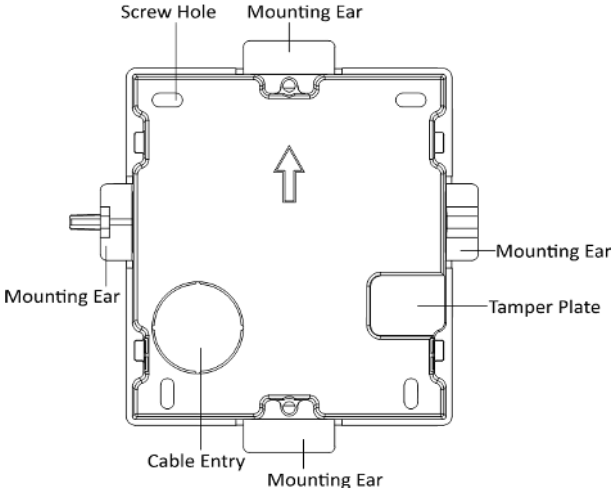

Figure 3-8 Gang Box

Note

The dimension of one-module gang box is: 115 (W) × 134 (H) × 56 (D) mm. The dimension is for reference only.

Steps

1. Drill an installation hole, and pull the cables out.

Note

- The suggested dimension of installation hole is 118 (W) × 108 (H) × 45.5 (D) mm.
- The suggested length of cables left outside is 100 mm.

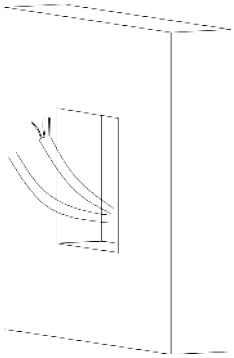

Figure 3-9 Drill Installation Hole

2. Remove the plastic sheet of the cable entry.

3. Mark the gang box screw holes on the wall.

1) Route the cables through the gang box hole.

2) Insert the gang box into the installation hole.

3) Mark the gang box screw holes' position with a marker, and take out the gang box.

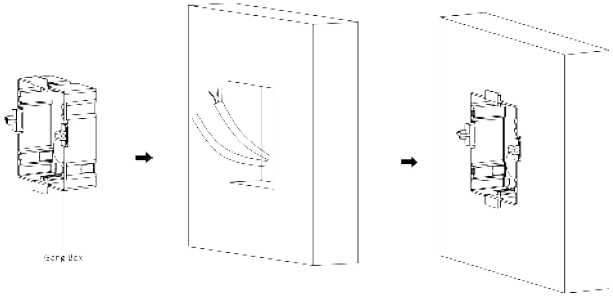

Figure 3-10 Mark the Screw Holes

4. Drill 4 holes according to marks on the wall, and insert the expansion sleeves into the screw holes.

Note

The suggested size of the hole is 6 (diameter) × 45 (depth) mm.

5. Route the cables through the gang box hole. Insert the gang box into the installation hole. Fix the gang box with 4 expansion bolts.

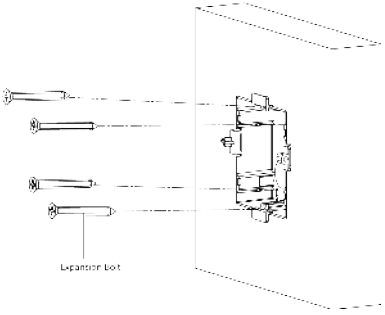

Figure 3-11 Fix the Gang Box

6. Fill the gap between the gang box and the wall with concrete. Remove the 4 mounting ears with tool after concrete is dry.

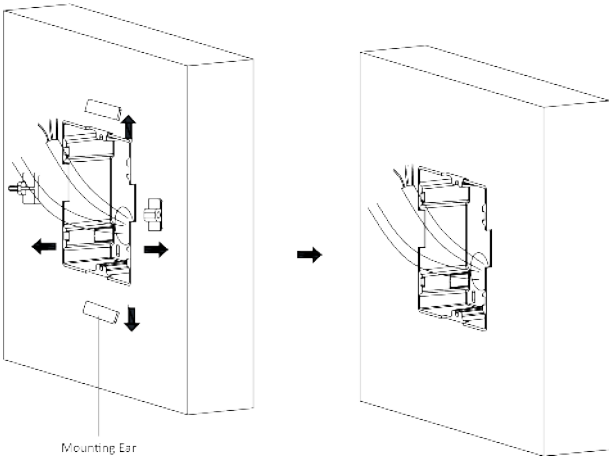

Figure 3-12 Remove the Mounting Ears

7. Connect the cables to the corresponding interfaces of the main unit and insert the unit into the gang box.

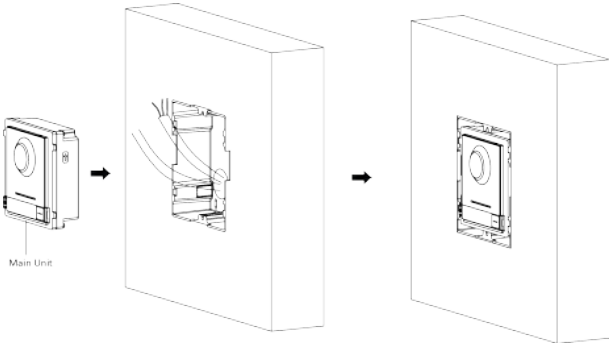

Figure 3-13 Insert the Main Unit

8. Fix the cover and the main unit with 2 socket head cap screws by using a hexagon wrench (supplied).

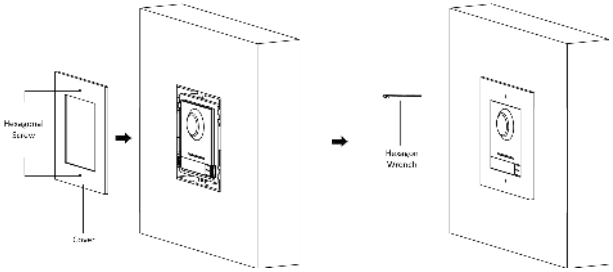

Figure 3-14 Fix the Cover

3.3 Two-Module Installation

3.3.1 Two-Module Surface Mounting

Before You Start

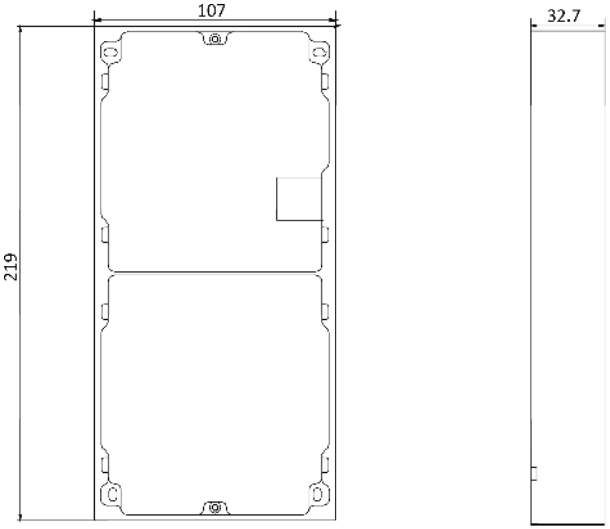

Figure 3-15 Mounting Frame

Note

- The dimension of two-module mounting frame (W × H × D) is: 219 mm × 107 mm × 32.7 mm.
- The dimensions above are for reference only. The actual size can be slightly different from the theoretical dimension.

Steps

1. Paste the installation Sticker 1 onto the wall. Make sure the sticker is placed horizontally via measuring with the gradienter.
2. Drill 4 holes according to the screw holes on the sticker. The suggested size of hole is 6 (diameter) × 25 (depth) mm. The suggested length of cables left outside is 270 mm.

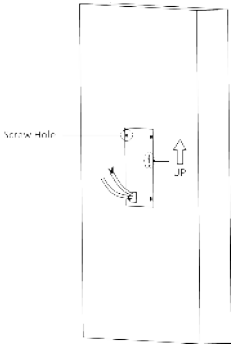

Figure 3-16 Drill Screw Holes

3. Remove the sticker and insert the expansion sleeves into the screw holes.
4. Fix the mounting frame onto the wall with 4 expansion bolts.

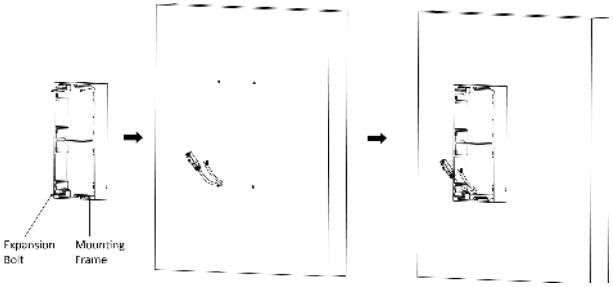

Figure 3-17 Fix the Mounting Frame

5. Thread the module-connecting line across the thread hole of the frame. Pass the main unit connecting lines across the thread hole to the upper grid.

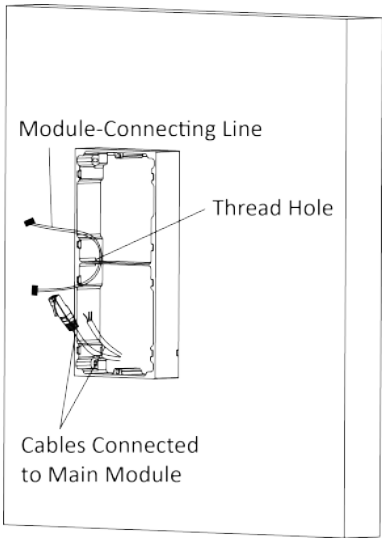

Figure 3-18 Placement of Lines

6. Connect the cables.

1) Connect the lines and module-connecting line to the corresponding interfaces of the main unit, then place the main unit into the upper grid.

2) Connect the other end of the module-connecting line to the input interface of the sub module.

3) Organize the cable with cable tie in the package. The suggested cable connection picture as shown below.

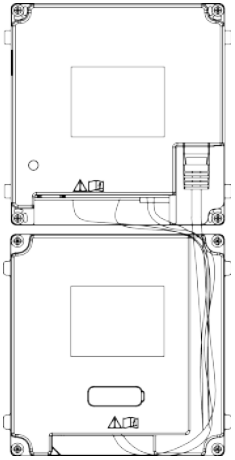

Figure 3-19 Line Connection Effect Picture

7. Insert the modules into the frame after wiring. The main unit must be placed in the top grid.

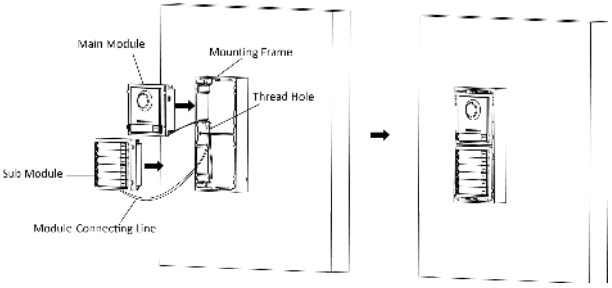

Figure 3-20 Insert the Modules

8. Use the hexagon wrench in the package to fix the cover onto the frame.

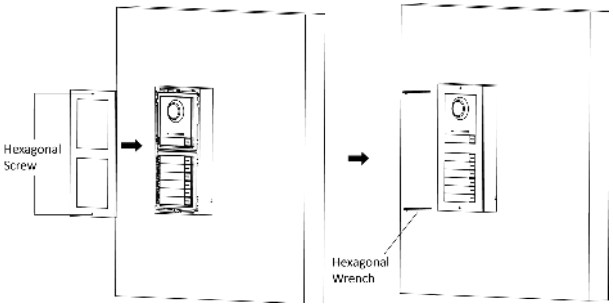

Figure 3-21 Fix the Cover

3.3.2 Two-Module Flush Mounting

Before You Start

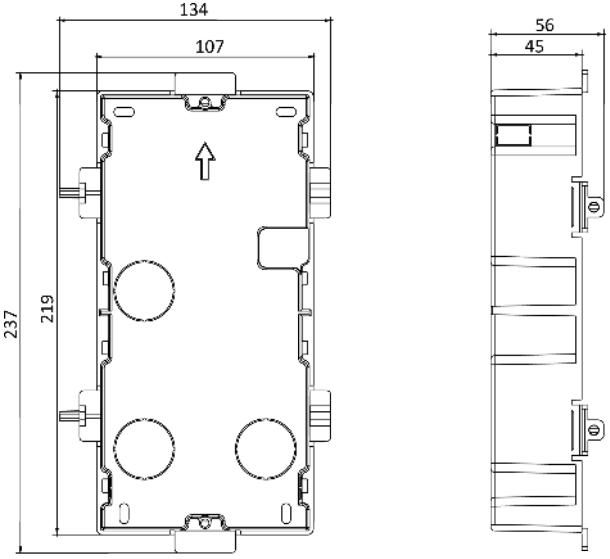

Figure 3-22 Gang Box

Note

The dimension of two-module gang box is: 237 (W) × 134 (H) × 56 (D) mm. The dimension is for reference only.

Steps

1. Drill the installation hole, and pull the cable out.

Note

- The suggested dimension of installation hole is 220 (W) × 108 (H) × 45.5 (D) mm.
- The suggested length of cables left outside is 270 mm.

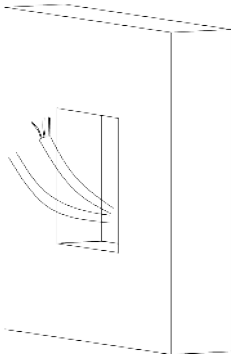

Figure 3-23 Drill the Installation Hole

2. Select a cable entry and remove the plastic sheet.

3. Mark the gang box screw holes on the hole.

1) Routs the cables through the gang box hole.

2) Insert the gang box into the installation hole.

3) Mark the gang box screw holes' position with a marker, and take out the gang box.

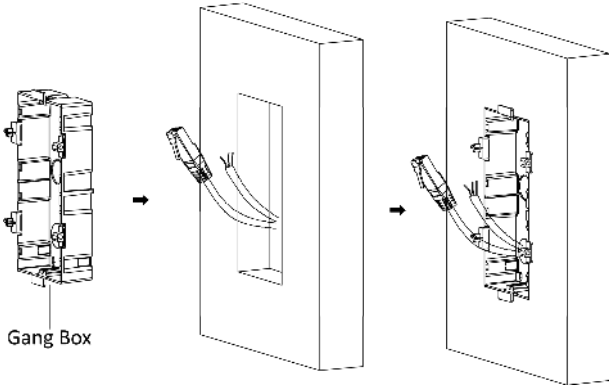

Figure 3-24 Mark the Screw Holes

4. Drill 4 holes according to the marks on the wall, and insert the expansion sleeves into the screw holes. The suggested size of hole is 6 (diameter) × 45 (depth) mm.

5. Fix the gang box with 4 expansion bolts.

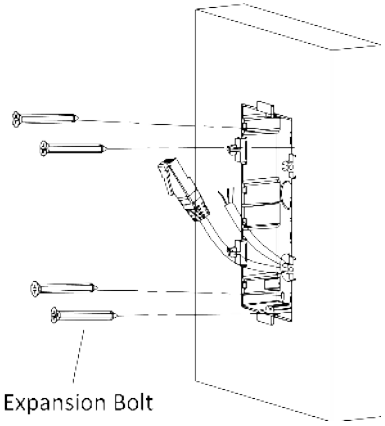

Figure 3-25 Fix the Gang Box

6. Fill the gap between the gang box and the wall with concrete. Remove the mounting ears with tool after concrete is dry.

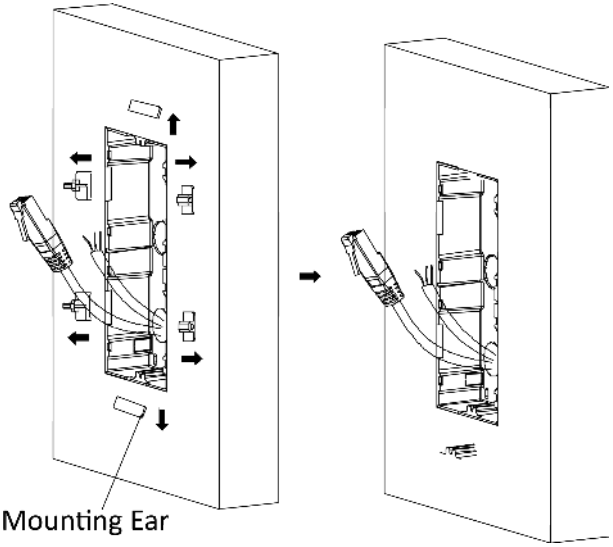

Figure 3-26 Remove the Mounting Ears

7. Connect cables and insert the modules.

1) Connect Cable 1 and one end of Cable 2 to the corresponding interfaces of the main unit, then insert the main unit into the upper grid.

2) Connect the other end of Cable 2 to the input interface of the sub module. Insert it into the lower grid.

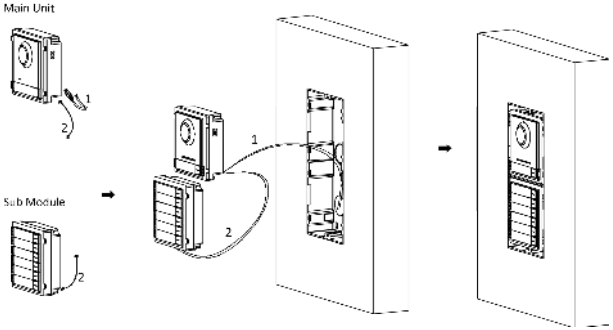

Figure 3-27 Connect Cables and Insert the Modules

Note

Cable 1 refers to the cables pulled out from the wall that connected to the main unit. Cable 2 refers to the module-connecting line in the accessory package.

8. Fix the cover with 2 socket head cap screws by using a hexagon wrench (supplied).

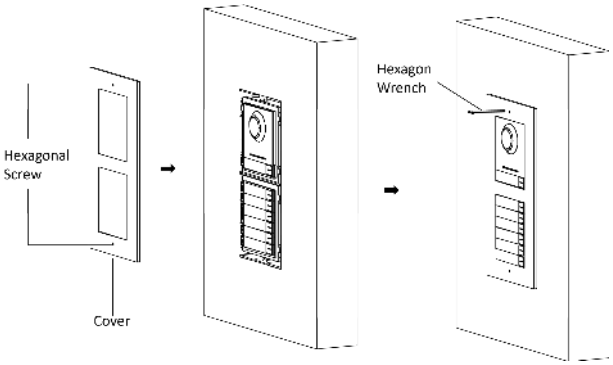

Figure 3-28 Fix the Cover

3.4 Three-Module Installation

3.4.1 Three-Module Surface Installation

Before You Start

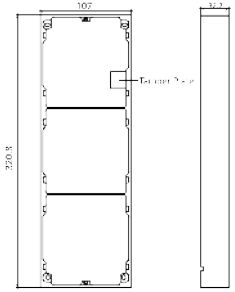

Figure 3-29 Mounting Frame

Note

- The dimension of two-module mounting frame (W × H × D) is: 320.8 mm × 107 mm × 32.7 mm.
- The dimensions above are for reference only. The actual size can be slightly different from the theoretical dimension.

Steps

1. Paste the installation sticker 1 onto the wall. Make sure the sticker is placed horizontally via measuring with the gradienter.
2. Drill 4 holes according to the screw holes on the sticker.The suggested size of hole is 6 (diameter) × 25 (depth) mm. The suggested length of cables left outside is 270 mm.

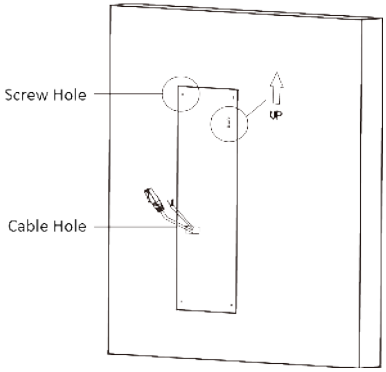

Figure 3-30 Drill Screw Holes

3. Remove the sticker and insert the expansion sleeves into the screw holes.
4. Fix the mounting frame onto the wall with 4 expansion bolts.

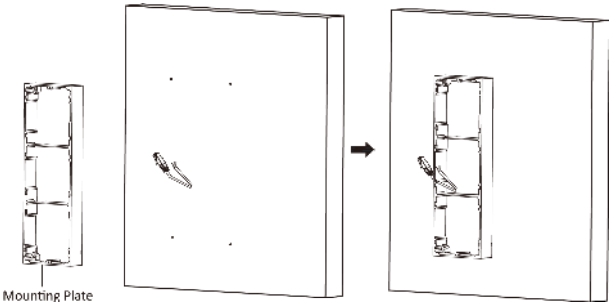

Figure 3-31 Fix the Mounting Frame

Note

The mounting frame should be placed exactly as shown below for this step. The tamper plate should be at the low right of the first grid.

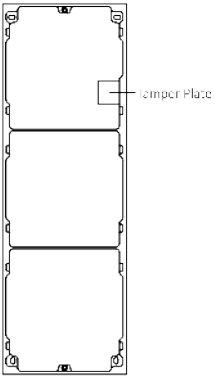

Figure 3-32 Mounting Frame

5. Thread the module-connecting line across the thread holes of the frame. Pass the main unit connecting line across the thread hole to the top grid.

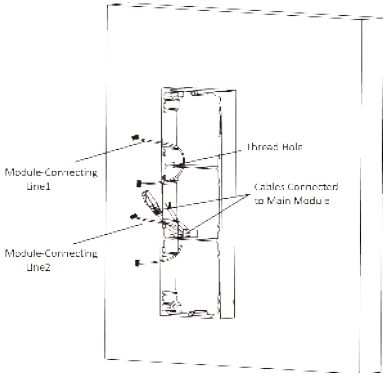

Figure 3-33 Placement of Lines

6. Connect the cables.

1) Connect the lines and module-connecting line 1 to the corresponding interfaces of the main unit, then place the main unit into the upper grid.
2) Connect the other end of the module-connecting line 1 to the input interface of the sub module. Connect two sub modules via module-connecting line 2.
3) Organize the cables with cable tie in the package. The suggested cable connection picture as shown below.

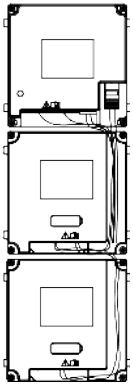

Figure 3-34 Line Connection Effect Picture

7. Insert the modules into the frame after wiring. The main unit must be placed in the top grid.

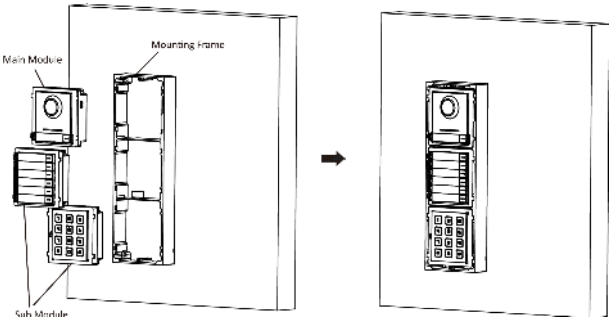

Figure 3-35 Insert the Modules into the Frame

8. Use the hexagon wrench in the package to fix the cover onto the frame.

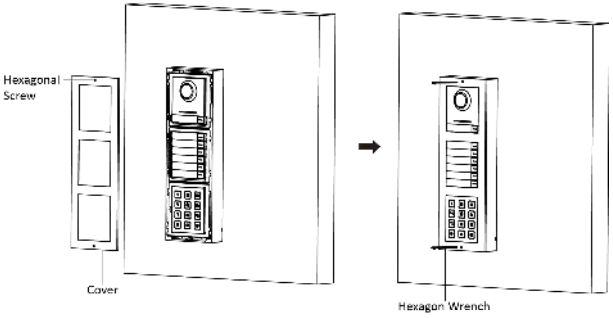

Figure 3-36 Fix the Cover

3.4.2 Three-Module Flush Mounting

Before You Start

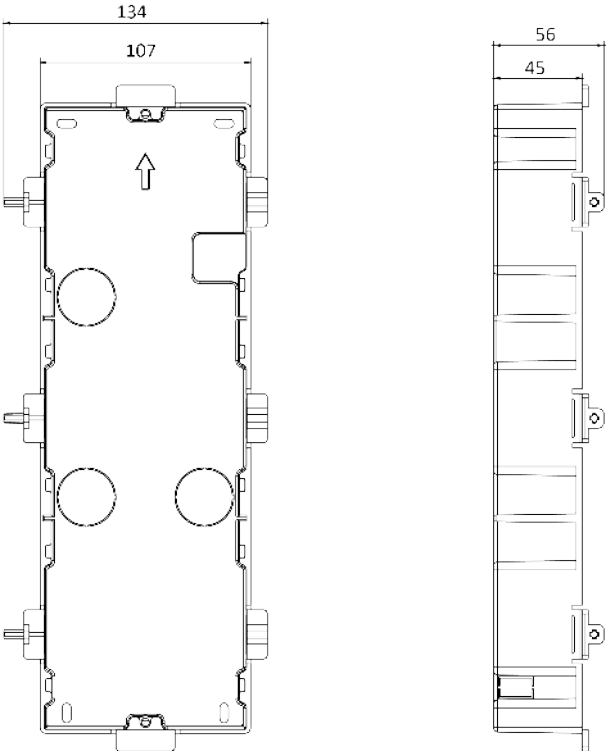

Figure 3-37 Gang Box

Note

- The dimension of one-module gang box is: 338.8(W)×134(H)×56(D) mm.
- The dimensions above are for reference only. The actual size can be slightly different from the theoretical dimension.

Steps

1. Cave the installation hole, and pull the cable out.The suggested dimension of installation hole is 321.8(W)×108(H)×45.5(D) mm. The suggested length of cables left outside is 270 mm.

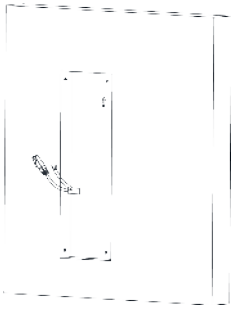

Figure 3-38 Cave the Installation Hole

2. Select a cable entry and remove the plastic sheet.

3. Mark the gang box screw holes on the wall.

1) Route the cables through the gang box hole.
2) Insert the gang box into the installation hole.
3) Mark the gang box screw holes' position with a marker, and take out the gang box.

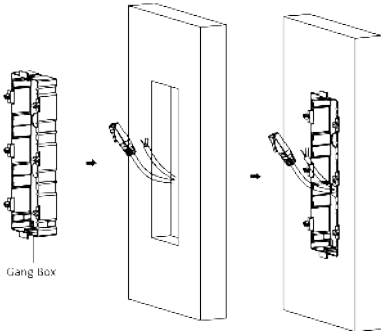

Figure 3-39 Mark the Screw Holes

4. Drill 4 holes according to marks on the wall, and insert the expansion sleeves into the screw holes. The suggested size of hole is 6 (diameter) × 45 (depth) mm.

5. Fix the gang box with 4 expansion bolts.

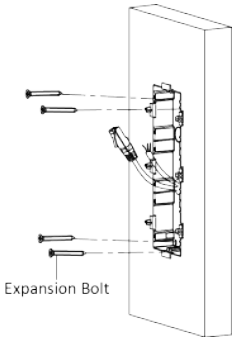

Figure 3-40 Fix the Gang Box

6. Fill the gap between the gang box and wall with concrete. Remove the mounting ears with tool after concrete is dry.

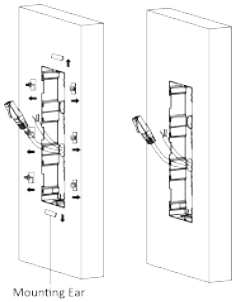

Figure 3-41 Remove the Mounting Ears

7. Connect cables and insert the modules.

1) Connect Cable 1 and one end of Cable 2 to the corresponding interfaces of the main unit, then insert the main unit into the upper grid.
2) Connect the other end of Cable 2 to the input interface of Sub Module 1. Connect one end of Cable 3 to the output interface of Sub Module 1 and insert it into the middle grid.
3) Connect the other end of Cable 3 to the input interface of Sub Module 2. Insert it into the bottom grid.

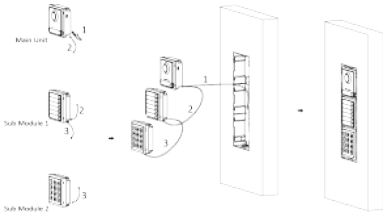

Figure 3-42 Connect Cables and Insert Modules

Note

Cable 1 refers to the cables pulled out from the wall that connected to the main unit. Cable 2 and Cable 3 refer to the module-connecting line in the accessory package.

8. Fix the cover and the main unit with 2 socket head cap screws by using a hexagon wrench (supplied).

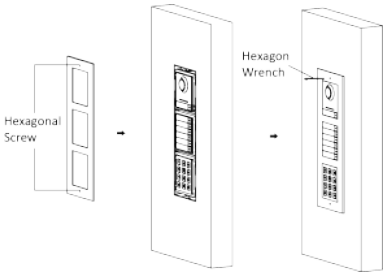

Figure 3-43 Fix the Cover

3.5 More-Than-Three Module Installation

3.5.1 More-than-Three Module Surface Mounting

Before You Start

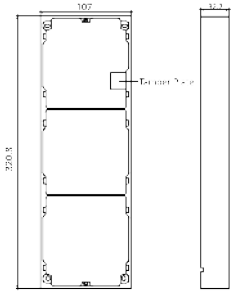

Figure 3-44 Mounting Frame

Note

- It takes two three-module mounting frames. The dimension of three-module mounting frame (W × H × D) is: 320.8 mm × 107 mm × 32.7 mm.
- The dimensions above are for reference only. The actual size can be slightly different from the theoretical dimension.

Steps

1. Paste two Sticker 1 onto the wall. Make sure the stickers are placed horizontally via measuring with the gradienter.
2. Drill 8 holes according to the screw holes on the sticker.

   Note

   - The suggested size of hole is 6 (diameter) × 25 (depth) mm.
   - The suggested length of cables left outside is 270 mm.

3. Pull out the cable through the cable hole of the left sticker.

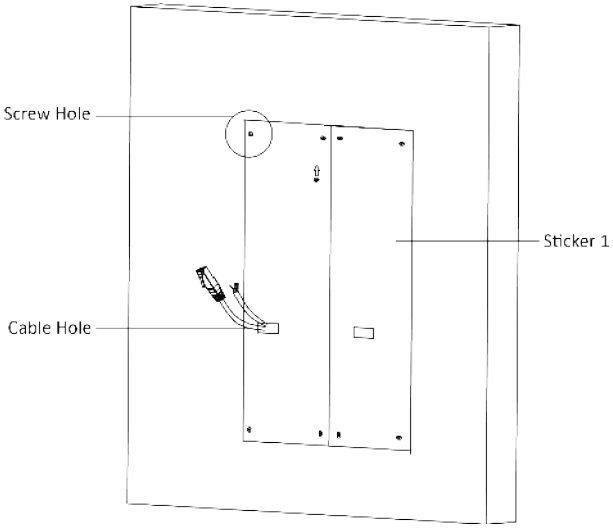

Figure 3-45 Drill Screw Holes

4. Remove the stickers and insert the expansion sleeves into the screw holes.

5. Thread the module-connecting line (400 mm) and grounding line across the thread hole of both frames.

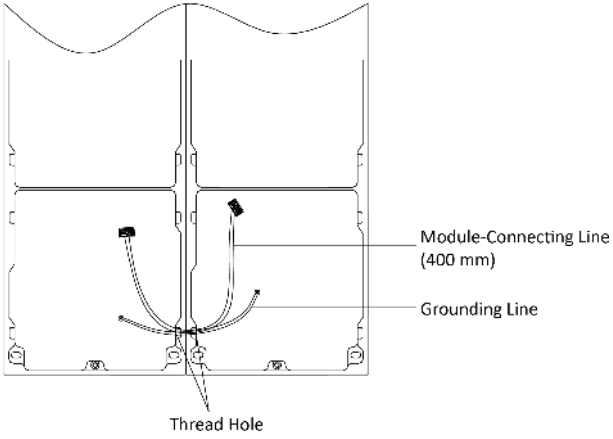

Figure 3-46 Place the Grounding Line and Module-Connecting Line

Note

- There are 6 module-connecting lines in the package: 190 mm × 4 and 400 mm × 2.
- Take the 400 mm module-connecting line for this step.
- The green-yellow line in the package is for grounding.

6. Fix the mounting frame onto the wall with 8 expansion bolts.

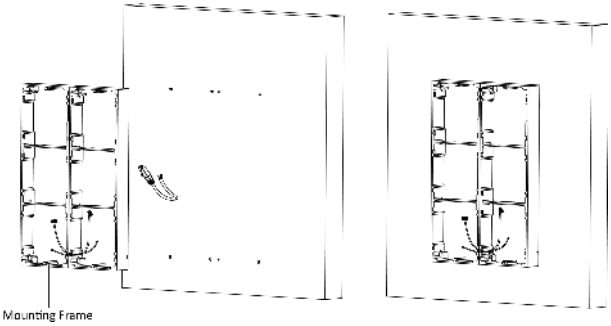

Figure 3-47 Fix the Mounting Frame

7. Pass the main unit connecting line across the thread hole to the top grid of the left frame. Thread the module-connecting line (190 mm) across the thread hole of the frame. The lines should be placed as shown below.

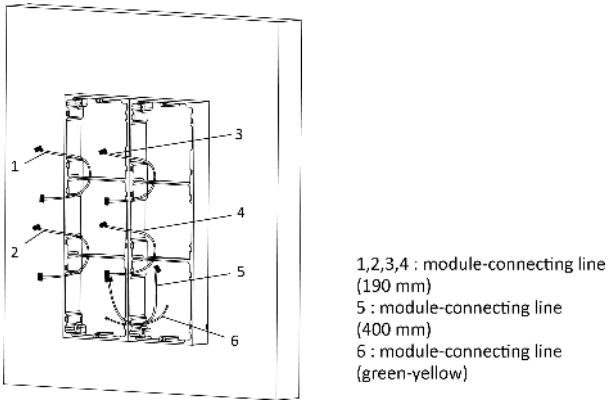

Figure 3-48 Placement of Lines

8. Connect the cables.

1) Connect the cables from the wall and module-connecting line 1 to the corresponding interfaces of the main unit, then place the main unit into the upper grid.
2) Connect the other end of the module-connecting line 1 to the input interface of the sub module. Connect all sub modules via module-connecting lines.
3) Organize the cable with cable tie in the package. The suggested cable connection picture as shown below.

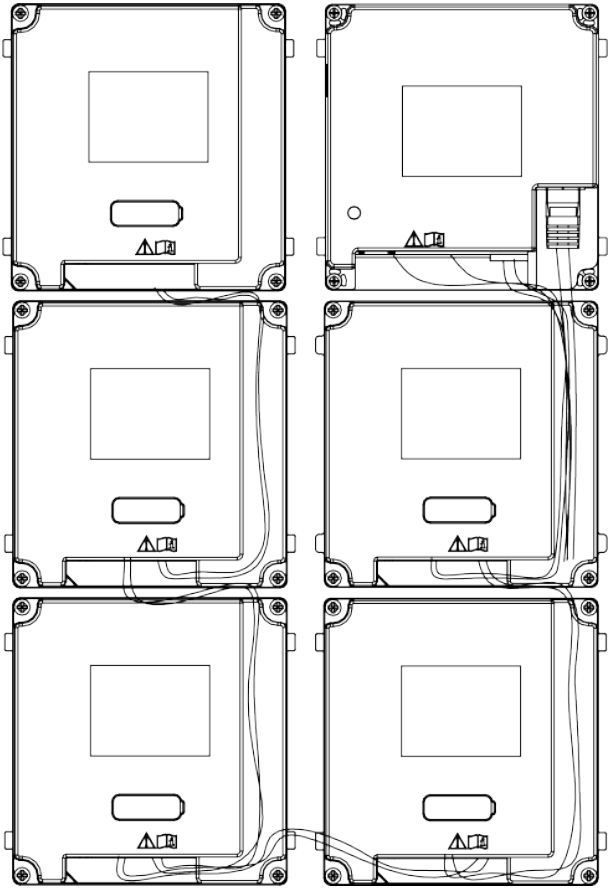

Figure 3-49 Line Connection Effect Picture

9. Insert the modules into the frame after wiring. The main unit must be placed in the top grid on the left.

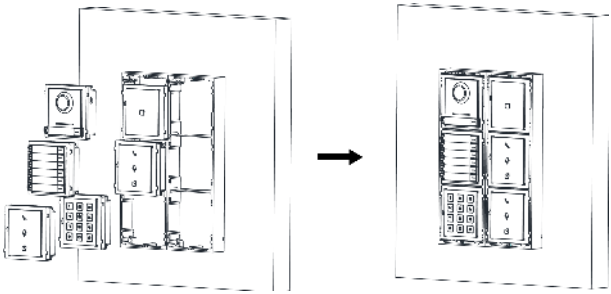

Figure 3-50 Insert the Modules

10. Pull the grounding line out and fixed its two end to the screw on the cover.

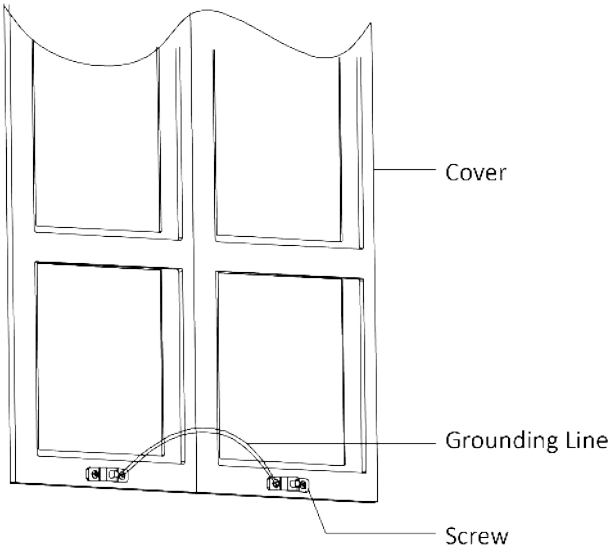

Figure 3-51 Connect the Grounding Line to the Cover

11. Use the hexagon wrench in the package to fix the cover onto the frame.

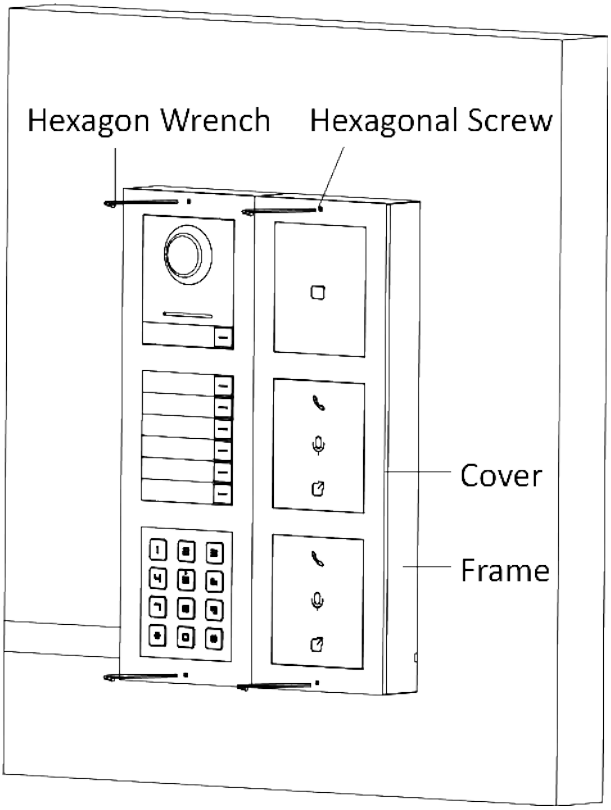

Figure 3-52 Fix the Cover

3.5.2 More-Than-Three Module Flush Mounting

Before You Start

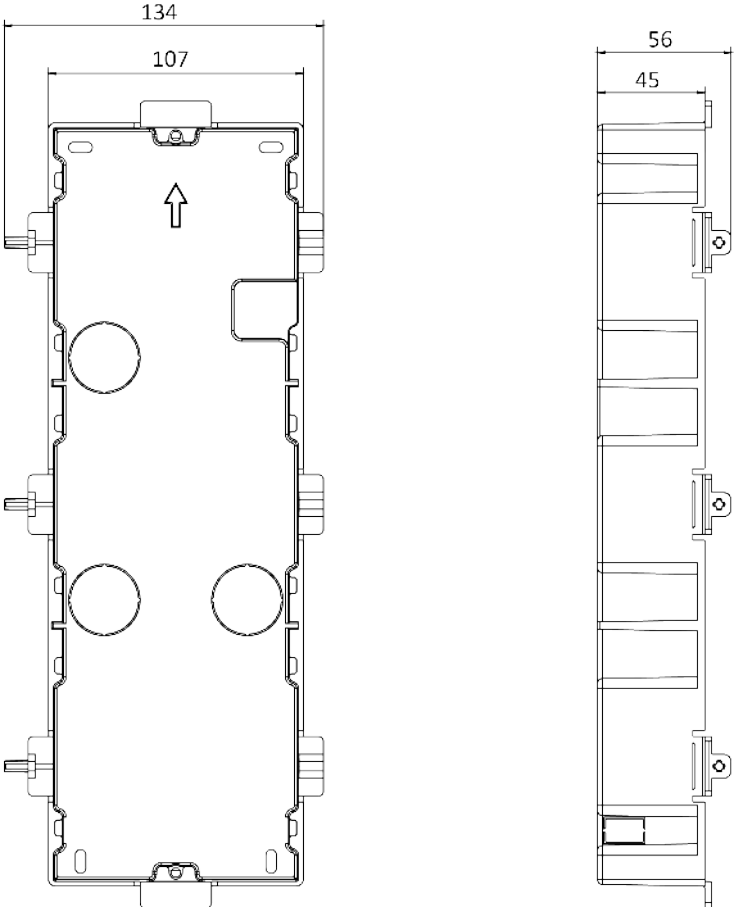

Figure 3-53 Gang Box

Note

It takes two three-module gang boxes. The dimension of the gang box is: 338.8 (W) × 134 (H) × 56 (D) mm. The dimension is for reference only.

Steps

1. Drill the installation hole, and pull the cable out.The suggested dimension of installation hole is 321.8 (W) × 315 (H) × 45.5 (D) mm. The suggested length of cables left outside is 270 mm.

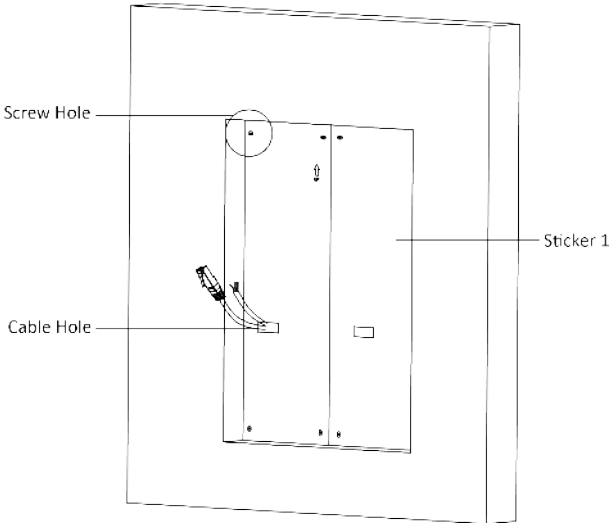

Figure 3-54 Cave the Installation Hole

2. Connect two gang boxes as below.

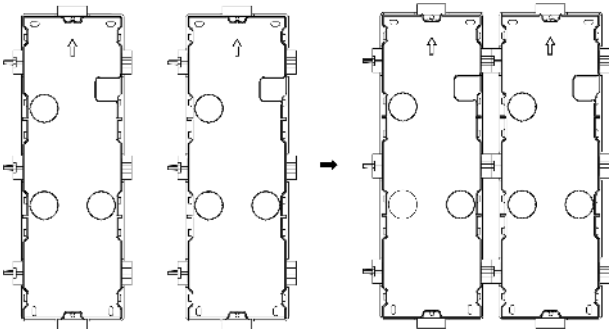

Figure 3-55 Connect Two Gang Boxes

3. Select a cable entry and remove the plastic sheet.

4. Remove the plastic sheets on the side of the gang boxes (shown as 1 and 2) below:

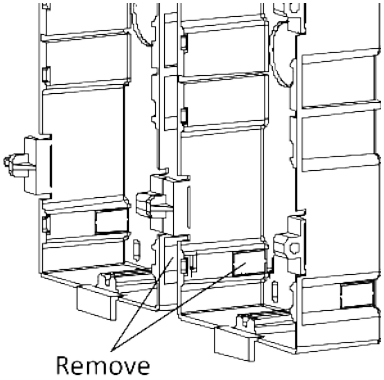

Figure 3-56 Remove the Plastic Sheets

5. Mark the gang box screw holes on the wall.

1) Route the cables through the gang box hole.

2) Insert the gang box into the installation hole.

3) Mark the gang box screw holes' position with a marker, and take out the gang box.

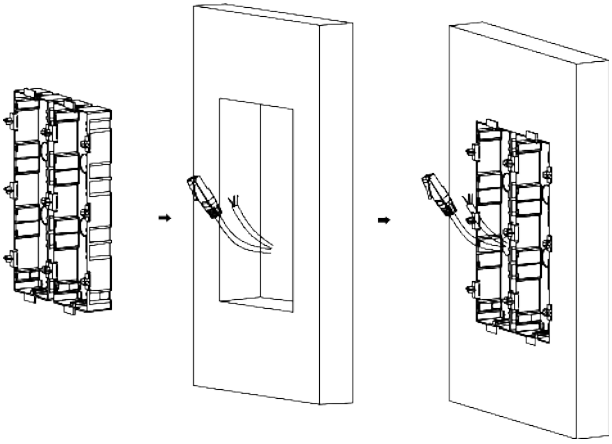

Figure 3-57 Mark the Screw Holes

6. Drill 8 holes according to the marks on the wall, and insert the expansion sleeves into the screw holes. The suggested size of hole is 6 (diameter) × 45 (depth) mm.

7. Fix the gang boxes with 8 expansion bolts.

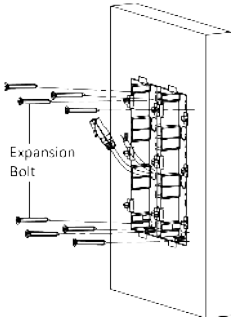

Figure 3-58 Fix the Gang Boxes

8. Fill the gap between the gang box and wall with concrete. Remove the mounting ears with tool after concrete is dry. Route the grounding line through the cable entries.

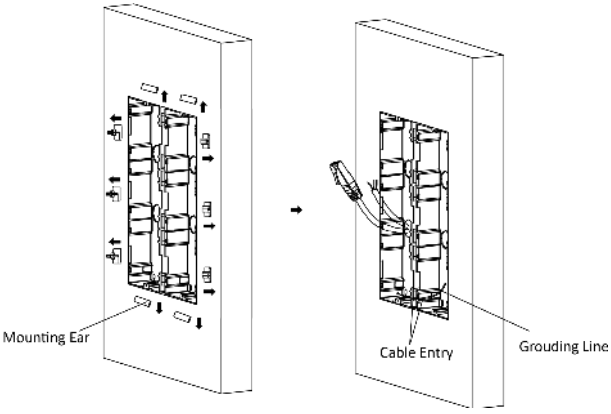

Figure 3-59 Remove the Mounting Ears

Note

The green-yellow line in the package is for grounding.

9. Connect cables and insert the modules.

1) Connect Cable 1 and one end of Cable 2 to the corresponding interfaces of the Main Unit, then place the Main Unit into the upper grid of the left gang box.
2) Connect the other end of Cable 2 to the input interface of Sub Module 1. Connect one end of Cable 3 to the output interface of Sub Module 1 and insert it into the middle grid of the left gang box.
3) Finish the wiring and inserting according to the cable number and the position shown as below.

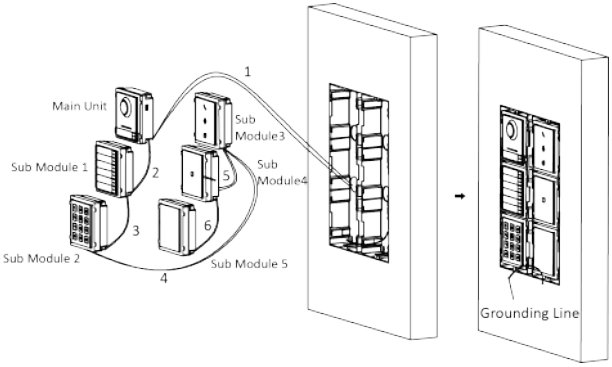

Figure 3-60 Install Mounting Frame

The cables connect to each module shown as below.

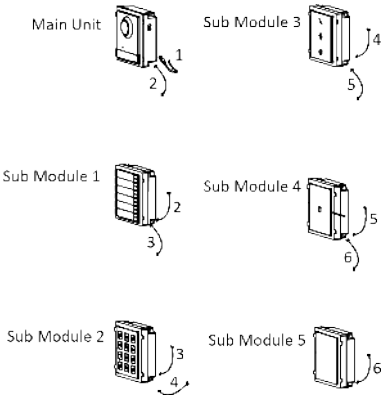

Figure 3-61 Cables Connection

Note

- Cable 2,3,5 and 6 are the module-connecting lines (190 mm) in the package.
- Cable 4 is the module-connecting line (400 mm) in the package.
- Main unit must be put in the top grid.

10. Pull the grounding line out and fixed its two end to the screw on the cover.

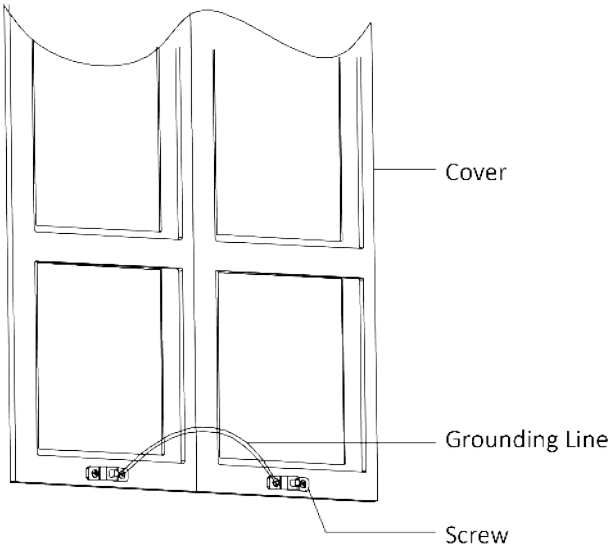

Figure 3-62 Connect the Grounding Line to the Cover

11. Fix the cover with 2 socket head cap screws by using a hexagon wrench (supplied).

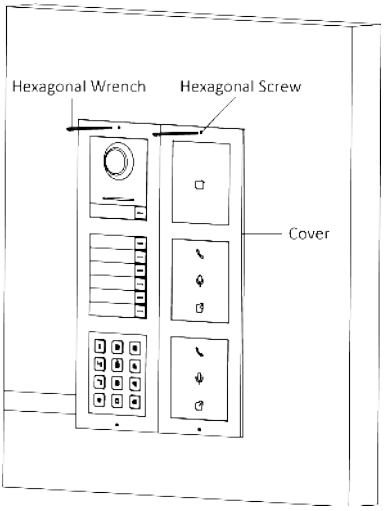

Figure 3-63 Fix the Cover

4 Activation

4.1 Activate Device via Client Software

You can only configure and operate the door station after creating a password for the device activation.

Default parameters of door station are as follows:

- Default IP Address: 192.0.0.65.
- Default Port No.: 8000.
- Default User Name: admin.

Steps

1. Run the client software, click **Maintenance and Management → Device Management → Device** to enter the page.
2. Click **Online Device**.
3. Select an inactivated device and click **Activate**.
4. Create a password, and confirm the password.

   Note

   We highly recommend you to create a strong password of your own choosing (using a minimum of 8 characters, including at least three kinds of following categories: upper case letters, lower case letters, numbers, and special characters) in order to increase the security of your product. And we recommend you change your password regularly, especially in the high security system, changing the password monthly or weekly can better protect your product.

5. Click **OK** to activate the device.

   Note

   - When the device is not activated, the basic operation and remote operation of device cannot be performed.
   - You can hold the **Ctrl** or **Shift** key to select multiple devices in the online devices, and click the **Activate** button to activate devices in batch.

4.2 Edit Network Parameters

To operate and configure the device via LAN (Local Area Network), you need connect the device in the same subnet with your PC. You can edit network parameters via **iVMS-4200** client software.

Steps

1. Select an online activated device and click the **Modify Netinfo**.
2. Edit the device IP address and gateway address to the same subnet with your computer.
3. Enter the password and click **OK** to save the network parameters modification.

Note

- The default port No. is 8000.
- The default IP address of the door station is 192.0.0.65.
- After editing the network parameters of device, you should add the devices to the device list again.

5 Configuration via Client Software

5.1 Device Management

Device management includes device activation, adding device, editing device, and deleting device, and so on.

After running the iVMS-4200, video intercom devices should be added to the client software for remote configuration and management.

5.1.1 Add Online Device

Before You Start

Make sure the device to be added is in the same subnet with your computer. Otherwise, please edit network parameters first.

Steps

1. Click **Online Device** to select an active online device.

2. Click **Add**.

3. Enter corresponding information, and click **Add**.

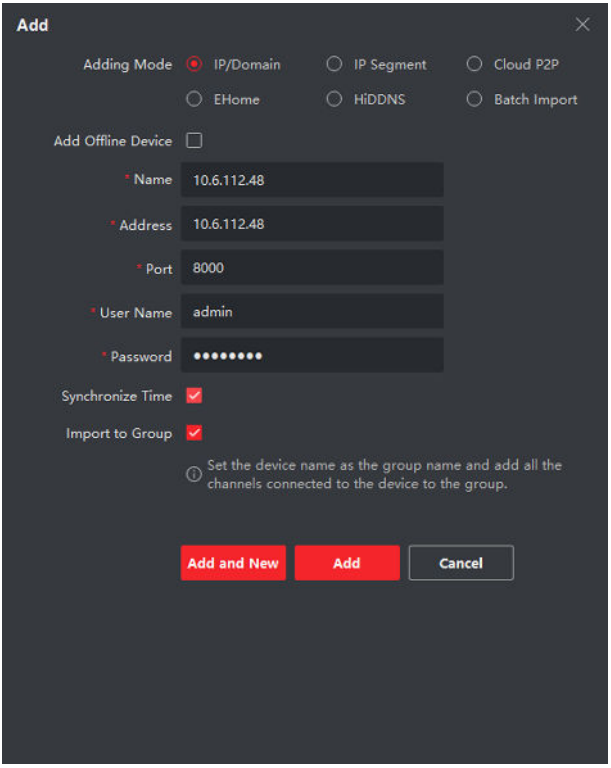

Figure 5-1 Add to the Client

5.1.2 Add Device by IP Address

Steps

1. Click **+Add** to pop up the adding devices dialog box.

2. Select **IP/Domain** as **Adding Mode**.

3. Enter corresponding information.

4. Click **Add**.

5.1.3 Add Device by IP Segment

You can add many devices at once whose IP addresses are among the IP segment.

Steps

1. Click **+Add** to pop up the dialog box.
2. Select **IP Segment** as **Adding Mode**.
3. Enter corresponding information, and click **Add**.

5.2 Live View via Door Station

Steps

1. On the main page of the client software, click **Main View** to enter the Live View page.
2. In the left list of the window, double-click the device IP or click the play icon to live view.
3. **Optional:** On the Live View page, control-click and select **Capture** to get the picture of the live view.

5.3 Remote Configuration

Click to set the parameters of the device.

Note

Run the browser, click → **Internet Options** → **Security** to disable the Protected Mode.

5.3.1 Device Management

You can manage the linked device on the page.

Click **Device Management** to enter the settings page.

Figure 5-2 Device Management

Add Device

- Click **Add** to add the indoor station or sub door station. Enter the parameters and click **OK** to add.
- Click **Import**. Enter the information of the device in the template to import devices in batch.

Export

Click **Export** to export the information to the PC.

Delete

Select the device and click **Delete** to remove the selected device from the list.

Refresh

Click **Refresh** to get the device information.

Optional: Set Device Information.

- Click to edit device information.
- Click to delete device information from the list.
- Select **Status** and **Device Type** to search devices.

5.3.2 Local Parameters Settings

You can configure the parameters of the live view, record files and captured pictures. The record files and captured pictures are the ones you record and capture by using the web browser. You can also set and view the saving paths of the captured pictures and recorded videos on the PC that running the web browser.

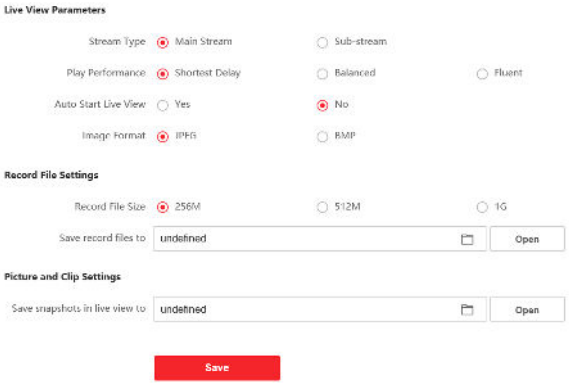

Figure 5-3 Local Parameters

Live View Parameters

Stream Type

Set the stream type as **Main Stream** or **Sub-stream**.

Play Performance

Set the live view performance to **Shortest Delay**, **Balanced** or **Fluent**.

Auto Start Live View

Check **Yes** to enable the function.

Image Format

Select the image format for picture capture.

Click **Save** to enable the settings.

Record File Parameters

Record File Size

Select the packed size of the manually recorded and downloaded video files to **256M**, **512M** or **1G**. After the selection, the maximum record file size is the value you selected.

Save record files to

Set the saving path for the manually recorded video files.

Click **Save** to enable the settings.

Picture and Clip Settings

Save snapshots in live view to

Set the saving path of the manually captured pictures in live view mode.

Note

You can click **Browse** to change the directory for saving the clips and pictures, and click **Open** to open the set folder of clips and picture saving.

Click **Save** to enable the settings.

5.3.3 System Settings

Follow the instructions below to configure the system settings, include System Settings, Maintenance, Security, and User Management, etc.

Click **System** to enter the settings page.

Basic Information

Click **System Settings → Basic Information** to enter the settings page. On the page, you can edit **Device Name** and **Device No.** Set the **Language** and **System Type** according to your needs.

Click **Save** to enable the settings.

Time Settings

Click **System Settings → Time Settings** to enter the settings page. Select the **Time Zone** of your location from the drop-down list.

- Enable **NTP**, set the **Server Address**, **NTP Port** and **Interval**.
- Enable **Manual Time Sync.**, set the time manually or check the **Sync. with computer time**.

Click **Save** to enable the settings.

DST

Click **System Settings → DST** to check **Enable DST**. Set the parameters according to your needs and click **Save** to enable the settings.

About

Click **System Settings → About** and click **Open Source Software Licenses** to view the details.

Maintenance

Click **Maintenance → Upgrade & Maintenance** to enter the settings page.

Figure 5-4 Maintenance

- Reboot: Click **Reboot** to reboot the device.
- **Restore**

  Click **Restore** to reset all the parameters, except the IP parameters and user information, to the default settings.

  Default

  Click **Default** to restore all parameters to default settings.

- Export parameters:
  1. Select **Device Parameters**, and click **Export** to pop up the dialog box.
  2. Set and confirm the encryption password.
  3. Click **OK** to export parameters.
- Import Config. File:
  1. Click browse icon to select the configuration file.
  2. Click **Import** and enter the encryption password to import.
- Upgrade: Click browse icon to select the upgrade file.

Note

The upgrading process will last 1 to 10 minutes, do not power off during the upgrading. The device reboots automatically after upgrading.

Security Service

Click **Security → Security Service** to enter the settings page. On the page, you can enable SSH according to your actual needs.

Click **Save** to enable the settings.

User Management

Click **User Management** to enter the settings page.

Administrator can edit the permission for the users.

Note

We highly recommend you to create a strong password of your own choosing (using a minimum of 8 characters, including at least three kinds of following categories: upper case letters, lower case letters, numbers, and special characters) in order to increase the security of your product. And we recommend you change your password regularly, especially in the high security system, changing the password monthly or weekly can better protect your product.

Online Users

Click **User Management → Online Users** to enter the page.

Figure 5-5 Online Users

Click **Refresh** to get the present information.

Arming/Disarming Information

Click **User Management → Arming/Disarming Information** to view the information. Click **Refresh** to get the present information.

5.3.4 Network Settings

TCP/IP Settings

TCP/IP settings must be properly configured before you operate the device over network. The device supports IPv4.

Steps

1. Click **Network → Basic Settings → TCP/IP** to enter the settings page.

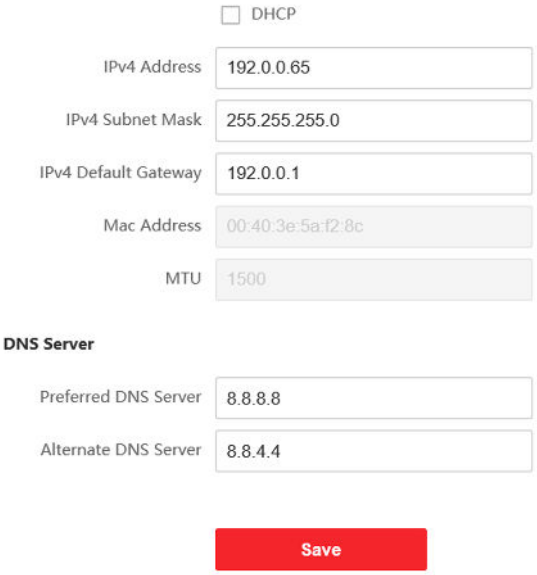

Figure 5-6 TCP/IP Settings

2. Configure the network parameters.
- Check **DHCP**, the device will get the parameters automatically.
- Set the **IPv4 Address**, **IPv4 Subnet Mask** and **IPv4 Default Gateway** manually.

3. Configure the corresponding DNS server parameters.

4. Click **Save** to enable the settings.

Port Settings

Steps

1. Click **Network → Basic Settings → Port** to enter the settings page.

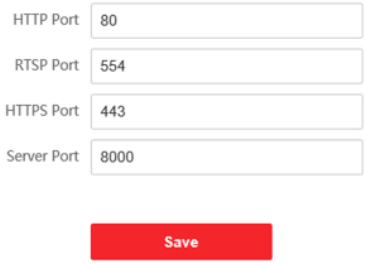

Figure 5-7 Port Settings

2. Set the ports of the device.

HTTP Port

The default port number is 80, and it can be changed to any port No. which is not occupied.

HTTPS Port

The default port number is 443, and it can be changed to any port No. which is not occupied.

RTSP Port

The default port number is 554.

Server Port

The default server port number is 8000, and it can be changed to any port No. ranges from 2000 to 65535.

3. Click **Save** to enable the settings.

SIP Setting

Steps

1. Click **Network** → **Basic Settings** → **SIP** to enter the settings page.

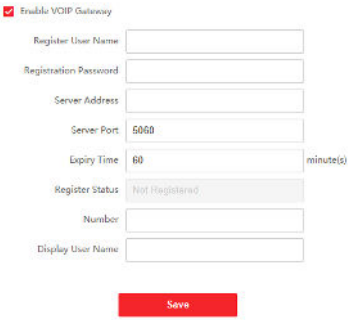

Figure 5-8 SIP Settings

2. Check **Enable VOIP Gateway**.

3. Configure the SIP parameters.

4. Click **Save** to enable the settings.

FTP Settings

Steps

1. Click **Network → Advanced → FTP** to enter the settings page.

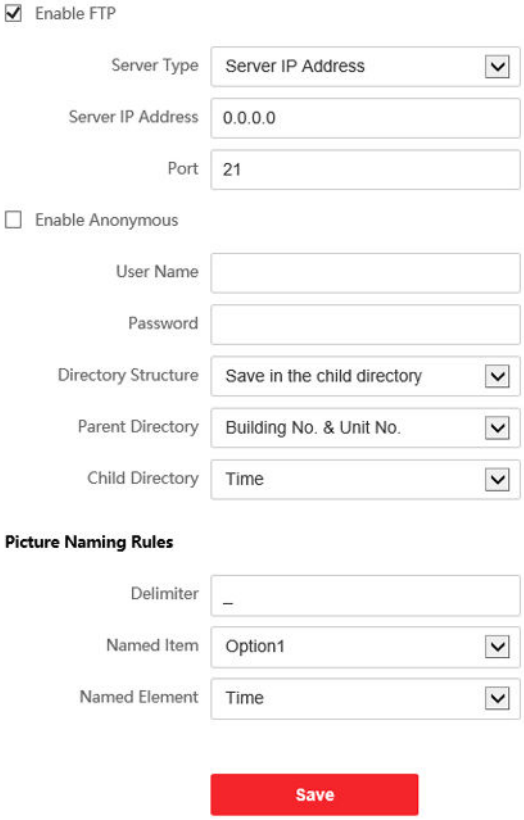

Figure 5-9 FTP Settings

2. Check **Enable FTP**.
3. Select **Server Type**.
4. Input the **Server IP Address** and **Port**.
5. Configure the FTP Settings, and the user name and password are required for the server login.
6. Set the **Directory Structure**, **Parent Directory** and **Child Directory**.
7. Set the picture naming rules.

8. Click **Save** to enable the settings.

5.3.5 Video & Audio Settings

Video Parameters

Steps

1. Click **Video/Audio → Video** to enter the settings page.

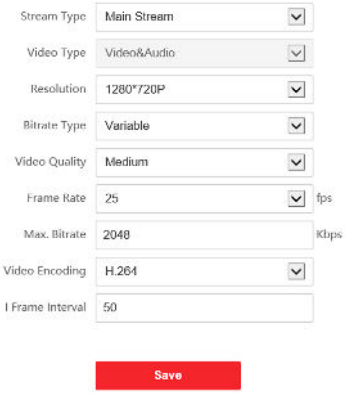

Figure 5-10 Video Parameters

2. Select the **Stream Type**.

3. Configure the video parameters.

Stream Type

Select the stream type to main stream or sub stream.

Video Type

Select the stream type to video stream, or video & audio composite stream.
The audio signal will be recorded only when the **Video Type** is **Video & Audio**.

Resolution

Select the resolution of the video output.

Bitrate Type

Select the bitrate type to constant or variable.

Video Quality

When bitrate type is selected as Variable, 6 levels of video quality are selectable.

Frame Rate

Set the frame rate. The frame rate is to describe the frequency at which the video stream is updated and it is measured by frames per second (fps). A higher frame rate is advantageous when there is movement in the video stream, as it maintains image quality throughout.

Max. Bitrate

Set the max. bitrate from 32 to 16384 Kbps. The higher value corresponds to the higher video quality, but the better bandwidth is required.

Video Encoding

The device supports H.264.

I Frame Interval

Set I Frame Interval from 1 to 400.

4. Click **Save** to save the settings.

Audio Parameters

Steps

1. Click **Video/Audio → Audio** to enter the settings page.

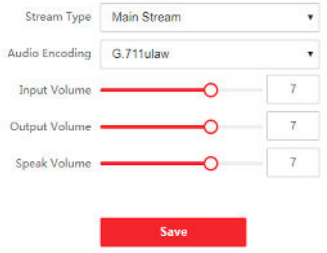

Figure 5-11 Audio Settings

2. Configure the stream type and the audio encoding type.

Stream Type

Select the stream type to main stream or sub stream.

Audio Encoding

The device support G.711ulaw and G.711 alaw.

3. Adjust the **Input Volume**, **Output Volume** and **Speak Volume**.

Note

Available range of volume: 0 to 10.

4. Click **Save** to save the settings.

5.3.6 Image Settings

Display Settings

Configure the image adjustment, backlight settings and other parameters in display settings.

Steps

1. Click **Image → Display Settings** to enter the display settings page.

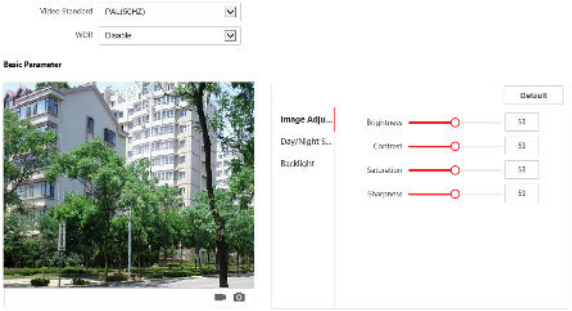

Figure 5-12 Display Settings

2. Select the **Format**.

3. Set the display parameters.

WDR

Wide Dynamic Range can be used when there is a high contrast of the bright area and the dark area of the scene.

Brightness

Brightness describes bright of the image, which ranges from 1 to 100.

Contrast

Contrast describes the contrast of the image, which ranges from 1 to 100.

Saturation

Saturation describes the colorfulness of the image color, which ranges from 1 to 100.

Sharpness

Sharpness describes the edge contrast of the image, which ranges from 1 to 100.

4. Set the **Day/Night Mode**.

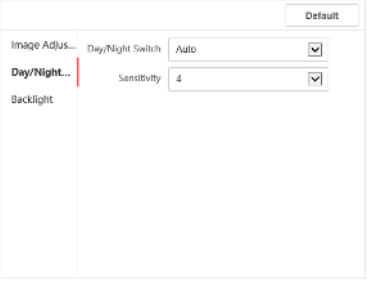

Figure 5-13 Day/Night Mode

- Set **Day Mode** or **Night Mode** manually.
- Set the mode as **Auto** and edit the sensitivity according to your needs.
- Set the mode as **Scheduled-Switch**. Set the start time and end time.

Note

Daytime is from configured start time to configured time. The rest of the time is set as night by default.

5. Set the backlight parameters.

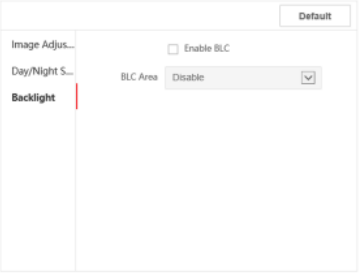

Figure 5-14 Backlight

1) Check the checkbox to enable BLC.

2) Select **BLC Area**.

6. Click **Save** to enable the settings.

OSD Settings

You can customize the camera name, time/date format, display mode, and OSD size displayed on the live view.

Steps

1. Click **Image → OSD Settings** to enter the settings page.

2. Check the corresponding checkbox to select the display of camera name, date or week if required.

3. Edit the **Camera Name**.

4. Select from the drop-down list to set the **Time Format** and **Date Format**.

5. Adjust the OSD position.

6. Click **Save** to enable the settings.

Target Cropping

Steps

1. Click **Image → Crop** to enter the page.

2. Check **Enable Target Cropping** to enable the function.

3. Click to capture photo.

4. Click to start recording.
5. Select **Cropping Resolution**.
6. Click **Save**.

Note

- You can select **Cropping Resolution** as **704*576**, **1280*720**, or **1920*1080**.
- You can zoom in or zoom out the image by selecting **Cropping Resolution** after clicking **Save**.

5.3.7 Event Settings

Motion Detection

Motion detection detects the moving objects in the configured security area, and a series of actions can be taken when the alarm is triggered.

Steps

1. Click **Event → Motion** to enter the settings page.

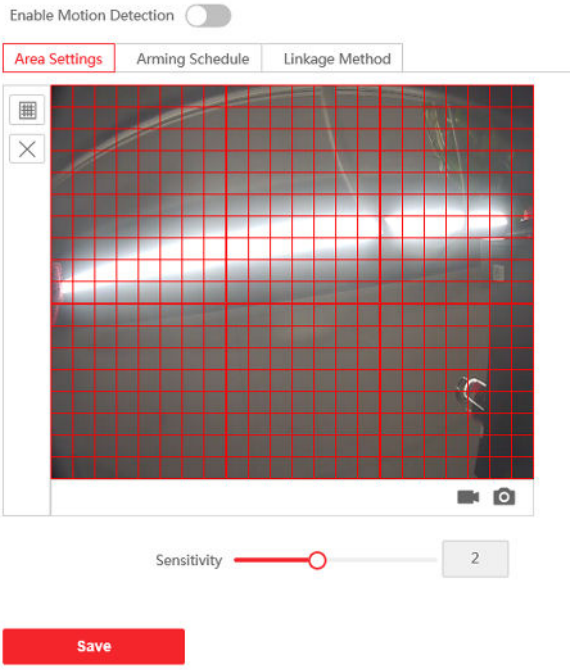

Figure 5-15 Motion Detection

2. Slide **Enable Motion Detection** to enable the function.
3. Click **Draw Area**. Click and drag the mouse on the live video to draw a motion detection area. Click **Save** to save the settings.

   Clear Area Click **X** to clear all of the areas.

   Adjust Sensitivity Move the slider to set the sensitivity of the detection.
4. Click **Arming Schedule** to edit the arming schedule.
5. Click on the time bar and drag the mouse to select the time period. Click **Save** to save the settings.

   Delete Schedule Click **Delete** to delete the current arming schedule.
6. Click **Linkage Method** to enable the linkages.
   Notify Security Center

Send an exception or alarm signal to the remote management software when an event occurs.

7. Click **Save** to enable the settings.

Event Linkage

Steps

1. Click **Event → Basic Event → Event Linkage** to enter the settings page.

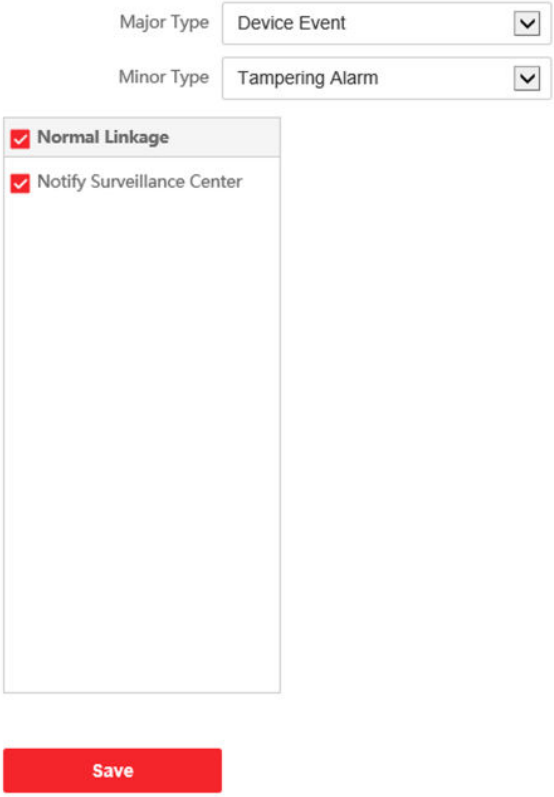

Figure 5-16 Event Linkage

2. Select the **Major Type** as **Device Event** or **Door Event**.

3. Select the type of the **Normal Linkage** for the event.

4. Click **Save** to enable the settings.

5.3.8 Schedule Settings

You can create call schedule, or else the device will call indoor station all day by default.

Steps

1. Click **Schedule → Video Intercom → Call Schedule** .

2. Click the next row below **Enable Indoor Station All Day by Default**.

3. Enter **Schedule Name**.

4. Select **Call Type**.

5. Set **Weekly Schedule**.

1) Click **Weekly Schedule**.

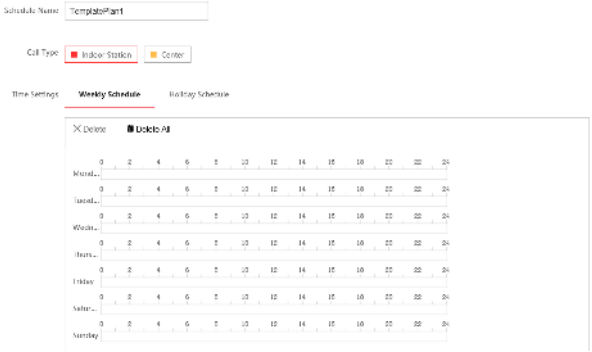

Figure 5-17 Weekly Schedule

2) Drag mouse to set the schedule according to the actual needs.

3) **Optional:** Click the copy icon to copy the schedule to other days according to the actual needs.

4) Click **Save**.

6. Set **Holiday Schedule**.

1) Click **Holiday Schedule**.

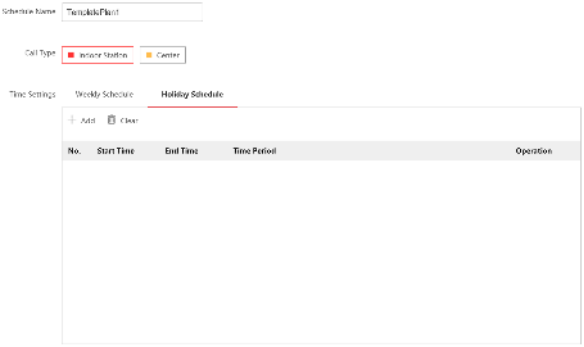

Figure 5-18 Holiday Schedule

2) Click **Add**.

3) Set **Start Time** and **End Time**.

4) Select **Call Type**.

5) Drag mouse to set the schedule according to the actual needs.

6) Click **OK**.

7) You can edit or delete the schedule according to the actual needs.

8) Click **Save**.

Note

The holiday schedule have higher priority than weekly schedule when you set the two schedule at the same time.

5.3.9 Intercom Settings

Device No. Settings

Steps

1. Click **Device No.** to enter the page.

Figure 5-19 Villa Door Station No. Settings

2. Select the device type from the drop-down list, and set the corresponding information including **Building No.**, **Floor No.**, **Door Station No.**, **Community No.** and **Unit No.**

Note

When you select **Doorphone** as **Device Type**, only **Community No.**, **Building No.** and **Unit No.** can be set.

3. Click **Save** to enable the device number configuration.

Note

- For main door station (D series or V series), the No. is 0.
- For sub door station (D series or V series), the No. cannot be 0. The No.of sub door station ranges from 1 to 99.
- For each villa or building, at least one main door station (D series or V series) should be configured, and one sub door stations (D series or V series) can be customized.
- For one main door station (D series or V series), up to 8 sub door stations can be configured.

Linked Network Settings

Steps

1. Go to **Intercom → Session Settings** to enter the settings page.
2. Set **Register Number** and **Registration Password**.

3. Set **Main Station IP** and **VideoIntercom Server IP**.

4. Enable Protocol 1.0.

5. Click **Save** to enable the settings.

Time Parameters

Go to **Intercom → Time Parameters** to enter the page.

Configure **Max. Call Duration**, **Max. Message Duration**, **Max. Ring Duration**, and click **Save**.

Note

- Max. call duration between the module indoor station and client ranges from 90 s to 120 s. The call will end automatically when the actual calling duration is longer than the configured one.
- Max. message duration ranges from 30 s to 60 s. The message will end automatically when the actual message duration is longer than the configured one.
- Max. ring duration refers to the maximum duration of the module indoor station when it is called without being accepted. Max. ring duration ranges from 65 s to 255 s.

Ring-Back Tone Settings

Click **Intercom → Ringbacktone Settings** to enter the settings page.

Click **Add** to select the ring tone from PC.

Note

Available Audio Format: WAV、AAC, Size: Less than 600 KB, Sample Rate: 8000Hz, Mono.

Press Button to Call

Steps

1. Go to **Intercom → Press Button to Call** to enter the settings page.

Figure 5-20 Press Button to Call

2. Edit room No. in the button settings and select **Link Time Schedule**.

Note

- The number of buttons may vary with different models. Please refer to the actual product.
- The schedule settings refers to ***Schedule Settings*** for details.

3. Click **Save** to enable the settings.

Input and Output

Go to **Intercom → I/O Settings** to enter the settings page.

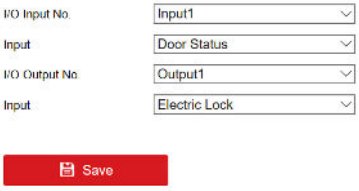

Figure 5-21 IO Input and Output

Select **I/O Input No.**, **Input**, **I/O Output No.** and **Output**.

Click **Save** to enable the settings.

Sub Module Configuration

Steps

1. Click **Intercom → Sub Module Configuration** , and you can view the sub module information, including No., module type, status, and version.

2. Click to edit the sub module.

Display Module

- Slide to adjust **Screen Backlight Brightness**.
- Slide **Enable Buzzer** to enable the function.

Touch-Display Module

- Slide to adjust **Screen Backlight Brightness**.
- Slide **Enable Buzzer** to enable the function.
- Select **Address Book Display Mode** according to actual needs.
- Enable **Homepage Shortcut Dial**, you can tap contact on the main page to call.
- Click **Add** to add custom buttons.

Note

- The module address is used to differentiate the sub modules. See *Configure Sub Module Address* for detailed configuration instructions.
- For the other sub modules (indicator module, keypad module and card reader module), it prompts **Not supported**.
- The room No. for the main unit's call button is 1 by default; and the room No. for the nametag modules call buttons are 2 to 7 by default.

Number Settings

Link the room No. and SIP numbers.

Click **Number Settings** to enter the page.

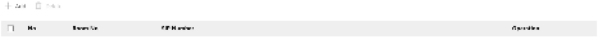

Figure 5-22 Number Settings

Click **Add**, set the **Room No.** and SIP numbers in the pop-up dialog box.

5.3.10 Access Control Settings

Permission Password

Steps

1. Click **Access Control → Permission Password** to enter the settings page.

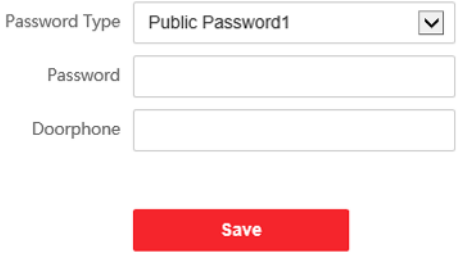

Figure 5-23 Permission Password

2. Select the password type.

3. Change the password.

4. Set the number of doorphone.

5. Click **Save** to enable the settings.

Door Parameters

Steps

1. Click **Access Control → Door Parameters** to enter the settings page.

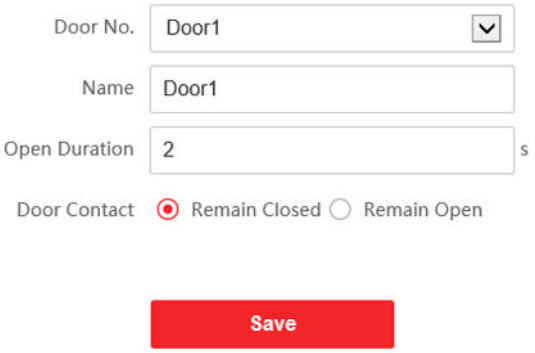

Figure 5-24 Door Parameters

2. Select the door and edit the door name.

3. Edit **Open Duration**.

4. Set door contact status.

5. Click **Save** to enable the settings.

Card Security

Go to **Access Control → Card Security** to enter the settings page.

Slide to enable card encryption parameters and CPU card reading content. Click **Save** to enable the settings.

5.3.11 Theme Settings

Set the advertisement on the main page of the device.

Steps

1. Click **Configuration → Theme** to enter the settings page.

2. Check to enable screen saving function.

3. Set the advertisement theme.

1) Click **+ Add Theme**.

2) Create a theme name, and select the advertisement body as **picture** or **Video**.

3) Click **Save**.

4. Click **+** to select a picture from the local as the material to be played in standby, and click **upload**.
5. Set the play schedule.

   1) Select a theme and drag the time interval to be played on the timeline.

   2) **Optional:** Click the drawn area to edit the time manually.

   3) Click **Delete** to delete the selected area. Click **Delete All** to delete all selected areas.
6. Adjust **Slide Show Interval**.

   Drag the block or enter the number to set the slide show interval. The picture will be changed according to the interval.
7. **Optional:** Slide to enable show custom content and edit custom content.

   The custom content displays on the main page of the device.
8. Click **Save**.

5.4 Video Intercom Settings

The Video Intercom Management module provides the function of video intercom, checking call logs and managing notice via the iVMS-4200 Client Software.

Note

For the user with access control module permissions, the user can enter the Access Control module and manage video intercom and search information.

You should add the device to the software and configure the person to link the device in Access Control module before your configuration remotely.

On the main page, click **AccessControlInfo → Video Intercom → Video Intercom** on the left bar to enter the Video Intercom page.

5.4.1 Receive Call from Door Station

Steps

1. Select the client software in the page to start calling the client and an incoming call dialog will pop up in the client software.
2. Click **Answer** to answer the call. Or click **Hang Up** to decline the call.
3. After you answer the call, you will enter the In Call page.

Adjust the Volume of Loudspeaker	Click to adjust the volume of loudspeaker.
Hang Up	Click **Hang Up** to hang up.
Adjust the Volume of Microphone	Click to adjust the volume of microphone.
Unlock Remotely	For door station, you can click to open the door remotely.

Note

- One video intercom device can only connect with one client software.
- The maximum ring duration can be set from 15s to 60s via the Remote Configuration of the video intercom device.
- The maximum speaking duration between indoor station and iVMS-4200 can be set from 120s to 600s via the Remote Configuration of indoor station.
- The maximum speaking duration between door station and iVMS-4200 can be set from 90s to 120s via the Remote Configuration of door station.

5.4.2 Search Call Logs

Steps

1. On the Video Intercom page, click **Call Log** to enter the page.

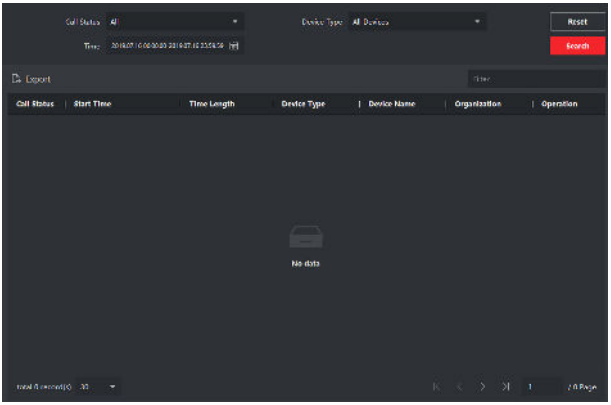

Figure 5-25 Search Call Logs

2. Set the search conditions, including call status, device type, start time and end time.

Call Status

Click ˅ to unfold the drop-down list and select the call status as **Dialed**, **Received** or **Missed**. Or select **All** to search logs with all statuses.

Device Type

Click ˅ to unfold the drop-down list and select the device type as **Indoor Station**, **Door Station**, **Outer Door Station** or **Analog Indoor Station**. Or select **All Devices** to search logs with all device types.

Start Time/End Time

Click the time icon to specify the start time and end time of a time period to search the logs.

Reset the Settings Click **Reset** to reset all the configured search conditions.

3. Click **Search** and all the matched call logs will display on this page.
4. **Optional:** Check the detailed information of searched call logs, such as call status, ring/speaking duration, device name, resident organization, etc.
5. **Optional:** Input keywords in the Search field to filter the desired log.
6. **Optional:** Click **Export** to export the call logs to your PC.

5.4.3 Upload Armed Information

Steps

1. On the main page, click upper right → **Tool** → **DeviceGuard** to enter the page.
2. Enable to arm or disarm the device.

Note

- While device has been added to the client software, the device armed by default.
- When the device is armed, the alarm logs upload to the client software automatically.
- Click **Alarm Application** → **Event Search** to search the alarm logs.

3. **Optional:** Click **Arm All** or **Disarm All** to arm or disarm all the device.

A. Communication Matrix and Device Command

Communication Matrix

Scan the following QR code to get the device communication matrix.

Note that the matrix contains all communication ports of Hikvision access control and video intercom devices.

Figure A-1 QR Code of Communication Matrix

Device Command

Scan the following QR code to get the device common serial port commands.

Note that the command list contains all commonly used serial ports commands for all Hikvision access control and video intercom devices.

Figure A-2 Device Command

See Far, Go Further

UD20209B-A